1.3.2 Average percentage of courses that include experiential learning through project work/field work/internship during last five years

Sl No.	Department
1	Automobile Engineering
2	Computer Science and Engineering
3	Electronics and Communication Engineering
4	Electrical and Electronics Engineering
5	Mechanical Engineering
6	Mechatronics Engineering
7	Master of Computer Applications

NEHRU COLLEGE OF ENGINEERING AND RESEARCH CENTRE
(NAAC Accredited)
(Approved by AICTE, Affiliated to APJ Abdul Kalam Technological University, Kerala)

Automobile Engineering

2019 - 20

Course code	Course Name	L-T-P – Credits	Year of Introduction
AU364	VEHICLE PERFORMANCE AND TESTING	3-0-0-3	2016

Prerequisite : Nil

Course Objectives

- To provide knowledge about various Vehicle Performance Characteristics.

Syllabus

Laboratory testing, Dynamometers, Wheel balancing & Wheel alignment, NVH, Vehicle performance, fuel economy, road and track testing, corrosion testing, chassis dynamometers.

Expected outcome:

- The students will become aware of the various testing methods of automobiles and the various equipments used for the testing of vehicles.

Text Books:

1. J. G. Giles – Vehicle operation and performance, Wildlife Publications, London, 1969.
2. SAE Transaction papers – 831814, 820346, 820367, 820371, 820375

References

1. Dr. N.K.Giri- Automotive technology – Khanna publishers, 2009
2. W. H. Crouse and L. Anglin – Motor vehicle inspection, McGraw Hill Book Co. 1978.

Course Plan

Module	Contents	Hours	Sem. Exam Marks
I	Laboratory testing: Basic engine parameters, Measurement of BHP, IHP- Engine testing on dynamometers, different types of dynamometers- hydraulic, eddy current etc.	7	15%
II	Engine analyzers- for petrol and diesel engines, FIP calibrating and testing, exhaust gas analyzers - various types- Orsat apparatus, infrared gas analyzers, smoke meter; Wheel alignment testing, Wheel balancing	7	15%
	FIRST INTERNAL EXAMINATION		
III	Noise vibration and Harshness: Review of vibration fundamentals, vibration control, fundamentals of acoustics, human response to sound, automotive noise criteria, Standard noise measurement methods, Noise inside and outside the vehicle, sources of vehicle noise- intake and exhaust noise, combustion noise, mechanical noise, noise from auxiliaries, wind noises, transmission noises, brake squeal, structure noise, noise control methods.	7	15%
IV	Vehicle performance: Methods for evaluating vehicle performance- energy consumption in conventional automobiles, performance, emission and fuel economy, Operation of full load and part conditions, effect of vehicle condition, tyre and road condition and traffic condition and driving habits on fuel economy, CAFÉ standards.	7	15%
	SECOND INTERNAL EXAMINATION		
V	Road and track testing: Initial inspection, PDI, Initial free services, engine running in and durability, intensive driving.	7	10%

PRINCIPAL
Nehru College of
Engineering and Research Centre
Pampady, Thiruvilwamala, Thrissur Dt
Kerala

	maximum speed and acceleration, brake testing on the road, hill climbing, handling and ride characteristics, safety, mechanism of corrosion, three chamber corrosion testing, wind tunnel testing, road testing, test tracks		
VI	Vehicle testing on chassis dynamometers: two wheel & four wheel dynamometers, vehicle testing lanes - side slip testers, brake testers, head light alignment testing	7	20%
END SEMESTER EXAM			

Question Paper Pattern

Maximum marks: 100 Time: 3 hours

The question paper shall consist of three parts

Part A
4 questions uniformly covering modules I and II. Each question carries 10 marks
Students will have to answer any three questions out of 4 (3X10 marks =30 marks)

Part B
4 questions uniformly covering modules III and IV. Each question carries 10 marks
Students will have to answer any three questions out of 4 (3X10 marks =30 marks)

Part C
6 questions uniformly covering modules V and VI. Each question carries 10 marks
Students will have to answer any four questions out of 6 (4X10 marks =40 marks)

Note: In all parts, each question can have a maximum of four sub questions, if needed

PRINCIPAL
Nehru College of
Engineering and Research Centre
Pampady, Thiruvilvamala, Thrissur Dt
Pin-68

Course code	Course Name	L-T-P – Credits	Year of Introduction
AU402	TWO AND THREE WHEELERS	3-0-0-3	2016

Prerequisite : Nil

Course Objectives

- To understand the constructional details operating characteristics and vehicle design aspects.

Syllabus

The power unit- two and four stroke, fuel and ignition system, transmission systems-clutches-gear box, chassis and sub systems-frames-suspension, brakes and wheels, two and three wheeler-case study.

Expected outcome

- The students will acquire two and three wheeler technology and latest developments in the industry.

Text Book:

- Irving, P. E., Motor cycle Engineering, Temple Press Book, London, 1982.

References

1. Bryant, R. V., Vespa maintenance and repair service.
2. Encyclopedia of Motor cycling, 20 volumes, Marshall Cavensih, New York and London, 1980.
3. K.K. Ramalingam, Two Wheelers, Scitech publications, Chennai.
4. Raymond Broad, Lambretta- A practical guide to maintenance and repair, 1987.
5. The Cycle Motor Manual, Temple Press Ltd., London, 1990.

Course Plan

Module	Contents	Hours	End Sem. Exam Marks
I	**The power plant** Two stroke and four stroke SI and CI engine construction and working, merits and demerits, symmetrical and unsymmetrical valve and port timing diagrams, scavenging process.	7	15%
II	**Fuel and ignition system** Fuel system- Different circuits in two wheeler fuel systems, fuel injection system, lubrication system Ignition systems- magneto coil and battery coil spark ignition system, electronic ignition system, starting system- kick starter system-self starter system, recent technologies	7	15%
FIRST INTERNAL EXAMINATION			
III	**Transmission system** Clutches- single- multi plate and centrifugal clutches, Gear box and its various gear controls in two wheelers.	7	15%
IV	**Chassis and sub-systems** Main frame for two and three wheelers, Its types, chassis and different drive systems for two wheelers Front and rear suspension systems-shock absorbers, panel meters and controls on handle bar, freewheeling devices	7	15%

PRINCIPAL
Nehru College of Engineering and Research Centre
Pambady, Thiruvilwamala, Thrissur-680

SECOND INTERNAL EXAMINATION			
V	**Brakes and wheels** Drum brakes and disc brakes-construction- working and types, front and rear brake link lay outs, brake actuation mechanism, spokes wheel, cast wheel, disc wheel and its merits and demerits Tyres and tubes construction and types, steering geometry	8	20%
VI	**Two and three wheelers- case study** Case study of sports bike, motor cycles, scooters and mopeds-auto rickshaws, pick up van, delivery van and trailer, servicing and maintenance, recent developments	6	20%
END SEMESTER EXAM			

Question Paper Pattern

Maximum marks: 100 Time: 3 hours

The question paper shall consist of three parts

Part A

4 questions uniformly covering modules I and II. Each question carries 10 marks

Students will have to answer any three questions out of 4 (3X10 marks =30 marks)

Part B

4 questions uniformly covering modules III and IV. Each question carries 10 marks

Students will have to answer any three questions out of 4 (3X10 marks =30 marks)

Part C

6 questions uniformly covering modules V and VI. Each question carries 10 marks

Students will have to answer any four questions out of 6 (4X10 marks =40 marks)

Note: In all parts, each question can have a maximum of four sub questions, if needed

NEHRU COLLEGE OF ENGINEERING & RESEARCH CENTRE PAMPADY THIRUVILWAMALA, THRISSUR-DT.

PRINCIPAL
Nehru College of
Engineering and Research Centre
Pampady, Thiruvilwamala, Thrissur Dt
Pin 680 597 Kerala

Course code	Course Name	L-T-P –Credits	Year of Introduction
AU403	VEHICLE DYNAMICS	3-0-0-3	2016

Prerequisite : Nil

Course Objectives

- To familiarize the students with vibrating systems
- To understand the characteristics of the tires.
- To know about the stability and handling characteristics of vehicles at different tracks.

Syllabus

Stability of vehicles-Braking requirements-Road Loads-Over steer, under steer, steady state cornering-Suspension-Tires-Performance of road vehicles-Classification of vibration-aerodynamic forces

Expected outcome.

- The students will be able to solve simple design problems based on the vehicle stability and various design parameter based problems.

Text Book:

1. Giri N.K, Automobile Mechanics, 8/e, Khanna Publishers
2. Rao V. Dukkipati, Jian Pang, "Road Vehicle Dynamics problems and solution", SAE, 2010

References

1. David Corolla, 'Automotive Engineering', 'Powertrain, chassis system and Vehicle Body', Butterworth Heinmann, 2009
2. G. Giles, 'Steering, Suspension and Tires, Illiffe Books Ltd., 1968.
3. J. Y. Wong, 'Theory of Ground Vehicles', John Wiley and Sons Inc., New York
4. JazarR N, Vehicle Dynamics, Springer Verlag, New York, 2014
5. W. Steeds, Mechanics of road vehicles, Wildlife book Ltd, London 1990.

Course Plan

Module	Contents	Hours	Sem.ExamMarks
I	Classification of vibration, Specification and Vibration, Vibration System and human comforts, Modal Analysis, One DOF, Two DOF, Free and Forced Vibration, Damped Vibration, Magnification and Transmissibility, Vibration Absorber. Performance of road vehicles: Tractive resistance, tractive effort, power required for propulsion, grade ability, drawbar pull and the problems related to these terms. Road performance curves- acceleration, gradability and drawbar pull, acceleration time and Elasticity.	7	15%
II	Tires: tire dynamics Ride characteristics, Behavior while Cornering, Slip angle, Cornering force, Power consumed by Tire, Oversteer, under steer, steady state cornering, aligning moment-combined braking and Cornering, effect of camber & transient effects in cornering. Tire vibrations	7	15%
	FIRST INTERNAL EXAMINATION		
III	Suspension: Vehicle dynamics and suspension	7	15%

NEHRU COLLEGE OF ENGINEERING & RESEARCH CENTRE Thiruvilwamala, Thrissur

PRINCIPAL
Nehru College of
Engineering and Research Centre
Pampady, Thiruvilwamala

	requirements, choice of suspension spring rate, chassis springs and theory of chassis springs, Gas & hydraulic dampers and choice of damper, damper characteristics, mechanics of an independent suspension system, Roll axis and the vehicle under the action of side forces.		
IV	Stability of vehicles: Load distribution (Three wheeled and four wheeled vehicles), Calculation of acceleration, tractive effort and reactions for different drives, stability of a vehicle on a curved track, slope and a banked road. Gyroscopic effects, weight transfer during acceleration, Cornering and braking, stability of a rigid vehicle and equations of motion of a rigid vehicle, cross wind handling.	7	15%
SECOND INTERNAL EXAMINATION			
V	Over steer, under steer, steady state cornering. Effect of braking, driving torques on steering. Effect of camber, transient effects in cornering. Directional stability of vehicles. Braking requirements, stopping distance, braking efficiency, work done in braking, tire adhesion.	7	20%
VI	Road Loads: Air resistance-Mechanics of air flow around a vehicle, pressure distribution on a vehicle, factors affecting rolling resistance, aerodynamic forces – aerodynamic drag, drag components, drag coefficient, aerodynamic aids, aerodynamic side force, lift force, pitching moment, yawing moment, rolling moment, cross wind sensitivity	7	20%
END SEMESTER EXAM			

Question Paper Pattern

Maximum marks: 100, Time: 3 hrs

The question paper should consist of three parts

Part A
3 questions uniformly covering modules I and II. Each question carries 15 marks
Students will have to answer any two questions out of 3 (2X15 marks =30 marks)

Part B
3 questions uniformly covering modules III and IV. Each question carries 15 marks
Students will have to answer any two questions out of 3 (2X15 marks =30 marks)

Part C
3 questions uniformly covering modules V and VI. Each question carries 20 marks
Students will have to answer any two questions out of 3 (2X20 marks =40 marks)

Note: In all parts, each question can have a maximum of four sub questions, if needed.

PRINCIPAL
Nehru College of Engineering and Research Centre
Pampady, Thiruvilwamala, Thrissur Dt
Pin - 680 597, Kerala

Course code	Course Name	L-T-P - Credits	Year of Introduction
AU404	ENGINE AND VEHICLE MANAGEMENT SYSTEMS	3-0-0-3	2016

Prerequisite : Nil

Course Objectives

- To understand the principles of various electronic systems in engine and vehicle management systems.

Syllabus

Open and closed loop control system, P, PI and PID control, ECUs in an Automobile, Electronic engine control. Engine performance variables and its control strategies; Electronic fuel control, Fuel injection system parameters affecting combustion, noise and emissions in CI engines. Electronic ignition control, Electronic control transmission, GPS navigation, On Board Diagnostics (OBD).Cruise control system, Anti-lock braking system, Traction control system, Electronic brake force distribution, Electronic stability program. Airbags, Collision avoidance radar warning system, Tyre pressure monitoring, Lane departure warning system, Night vision system

Expected outcome

- The students will be able to explain the principles of various electronic engine and vehicle management systems

Text Book:

William B Ribbens, "Understanding Automotive Electronics: An Engineering Perspective", Butterworth-Heinermann, 7th edition, 2012

References:

1. Eric Chowanietz, "Automobile Electronics" SAE Publications, 1994
2. Konrad Reif (Ed.), Bosch Professional Automotive Information, Diesel Engine management Systems and Components, Springer Verlag, 2014
3. Konrad Reif (Ed.), Bosch Professional Automotive Information, Gasoline Engine management Systems and Components, Springer Verlag, 2015
4. Robert Bosch, "Automotive Hand Book", SAE (8th Edition), 2011.
5. Steve V. Hatch, "Computerised engine controls", Cengage Learning, 2012
6. Tom Denton, "Automobile Electrical and Electronic Systems" 4th edition, Routledge, 2012

Course Plan

Module	Contents	Hours	Sem. Exam Marks
I	Open and closed loop control system, P, PI and PID control, ECUs in an Automobile, Microcomputers in Control system, look up tables, Introduction to modern control strategies like Fuzzy logic and adaptive control	7	15%
II	Electronic engine control – input and output, Engine performance variables and its control strategies, Engine mapping Effect of Air/Fuel ratio on performance, Effect of spark timing on performance, Effect of EGR on performance, exhaust control	7	15%
	FIRST INTERNAL EXAMINATION		
III	Electronic fuel control, engine control sequence, open loop and closed control, cold starting, acceleration and full load		15%

NEHRU COLLEGE OF ENGINEERING & RESEARCH CENTRE THRISSUR
PRINCIPAL
Nehru College of Engineering and Research Centre
Thiruvilwamala, Thrissur

	enrichment, deceleration leaning, overrun fuel cut off, Idle speed control and EGR control		
IV	Fuel injection system parameters affecting combustion, noise and emissions in CI engines. Pilot, main, advanced post injection and retarded post injection. Electronic ignition control, Ignition timing map, Ignition timing calculation (Initial timing, Basic advance angle, Corrective advance angle), spark advance correction scheme.	7	15%
SECOND INTERNAL EXAMINATION			
V	Electronic control transmission: control of shift timing, control of lock up, neutral to drive squat control, engine torque control. Dual clutch automatic, Automated manual transmission, Continuously variable transmission. GPS navigation and On Board Diagnostics (OBD).	7	20%
VI	Cruise control system, Anti-lock braking system, Traction control system, Electronic brake force distribution, Electronic stability program. Airbags, Collision avoidance radar warning system, Tyre pressure monitoring, Lane departure warning system, Night vision system	7	20%
END SEMESTER EXAM			

Question Paper Pattern

Maximum marks: 100 Time: 3 hours

The question paper shall consist of three parts

Part A
4 questions uniformly covering modules I and II. Each question carries 10 marks
Students will have to answer any three questions out of 4 (3X10 marks =30 marks)

Part B
4 questions uniformly covering modules III and IV. Each question carries 10 marks
Students will have to answer any three questions out of 4 (3X10 marks =30 marks)

Part C
6 questions uniformly covering modules V and VI. Each question carries 10 marks
Students will have to answer any four questions out of 6 (4X10 marks =40 marks)

Note: In all parts, each question can have a maximum of four sub questions, if needed

NEHRU COLLEGE OF ENGINEERING & RESEARCH CENTRE
THIRUVILWAMALA
THRISSUR, DT.

PRINCIPAL
Nehru College of
Engineering and Research Centre
Pampady, Thiruvilwamala, Thrissur Dt
Pin - 680 597, Kerala

Course code	Course Name	L-T-P – Credits	Year of Introduction
AU407	ADVANCED IC ENGINES	3-0-0-3	2016

Prerequisite: NIL

Course Objectives

- To impart the basic concepts of non-conventional IC Engines
- To know the new concepts of automotive engine combustion technologies
- To discuss about future engine technologies

Syllabus

Types of engines -Dual fuel engine concepts and significance-Multi fuel engines-Lean burn engines - Gas turbine plants -Stratified charge combustion in direct injection SI engines -HCCI and CAI engines

Expected outcome

- The students will become aware of the latest developments and advancement in the field of IC engines

Text Books:

1. H Zhao, Advanced Direct Injection Combustion Engine Technologies and Development, volume 1- gasoline and gas engines, Wood head publishing, 2009
2. H Zhao, Advanced Direct Injection Combustion Engine Technologies and Development, volume 2- diesel engines, Wood head publishing, 2009

Reference books

3. H Zhao , HCCI and CAI Engines for the Automotive Industry ,Woodhead publishing
4. Derek Dunn -Rankin, Lean Combustion: Technology and Control , Academic press, 2007
5. M. L. Mathur, R. P. Sharma - Internal Combustion Engines, Dhanpat Rai Publications
6. V Ganesan, *Internal Combustion Engine* Tata Mc Graw Hill Publishing Company Ltd., New Delhi 2006.

Course Plan

Module	Contents	Hours	Sem. Exam Marks
I	Types of engines - Wankel engine - Stirling engine - free piston engine. – light duty DI diesel engines (HSDI), high pressure pump technology, multiple injection diesel combustion	7	15%
II	Dual fuel engine concepts and significance, factors affecting combustion in dual fuel engines, performance of dual fuel engines. Multi fuel engines, characteristics of multi fuel engines, performance of multi fuel engines. Concept and working of flexi fuel vehicles (FFV).	7	15%
FIRST INTERNAL EXAMINATION			
III	Lean burn engines – fundamentals of lean combustion – burning in flames – auto ignitive burning – flame stabilization – lean burn SI engines – engine combustion and emissions – lean limit operations	8	20%
IV	Gas turbine plants – Open and closed cycles – thermodynamic cycles – regeneration – re heating – inter cooling – efficiency and performance of gas turbines – Gas turbine as automotive engine –	6	10%

PRINCIPAL
Nehru College of
Engineering and Research Centre

	Limitations of gas turbine in automotive sector. Comparison of gas turbine Vs. I.C engine. Condition for perfect reheating and inter cooling, simple problems		
SECOND INTERNAL EXAMINATION			
V	Stratified charge combustion in direct injection SI engines – thermodynamic and combustion process – production engines with stratification – future trends – Turbo charged direct injection SI engines – problems and challenges – advantages – future trends Direct injection gasoline engines with auto ignition combustion – principles and approaches – operation and control – development of practical engines – future trends. Direct injection natural gas engines – technologies – potential applications – strength and weakness – future trends	7	20%
VI	HCCI and CAI engines – fundamentals – effect of use of exhaust gas dilution – approaches to CAI/HCCI – Two stroke CAI engines – principles – control – potential applications – four stroke gasoline and diesel HCCI engines – HCCI fuel requirements – low temperature and premixed combustion with late injection – NADI concept of HCCI –CAI control and CAI/SI switching	7	20%
END SEMESTER EXAM			

Question Paper Pattern

Maximum marks: 100 Time: 3 hours

The question paper shall consist of three parts

Part A
4 questions uniformly covering modules I and II. Each question carries 10 marks
Students will have to answer any three questions out of 4 (3X10 marks =30 marks)

Part B
4 questions uniformly covering modules III and IV. Each question carries 10 marks
Students will have to answer any three questions out of 4 (3X10 marks =30 marks)

Part C
6 questions uniformly covering modules V and VI. Each question carries 10 marks
Students will have to answer any four questions out of 6 (4X10 marks =40 marks)

Note: In all parts, each question can have a maximum of four sub questions, if needed

NEHRU COLLEGE OF ENGINEERING & RESEARCH CENTRE
THIRUVILWAMALA
THRISSUR DT

PRINCIPAL
Nehru College of
Engineering and Research Centre
Pampady, Thiruvilwamala, Thrissur Dt
Pin 680 588 Kerala

Course code	Course Name	L-T-P – Credits	Year of Introduction
AU409	SIMULATION AND ANALYSIS OF IC ENGINE PROCESSES	3-0-0-3	2016

Prerequisite : AU201 & AU202

Course Objectives

- To provide an outline of the simulation methods adopted for IC Engine processes

Syllabus

Heat of reaction at constant volume and constant pressure - Constant volume and constant - pressure adiabatic combustion - Adiabatic flame temperature - Simulation of SI Engine Combustion - working substance under full and part throttle conditions - CI engine simulation with adiabatic combustion - supercharged and turbocharged conditions - flow through valves - Mach index - Effect of valve timing - Swirl and squish - scavenging parameters - delivery ratio - trapping efficiency - two stroke engine simulation - Engine friction variation, models for engine friction - Heat transfer mechanisms in engines

Expected outcome.

- The students will be to simulate processes in SI & CI engines

Text Books:

1. V.Ganesan, Computer simulation of compression ignition engine processes, Universities Press
2. V Ganesan Computer simulation of Spark Ignition Engine Processes, Universities Press

References

3. Richard Stone, Introduction to Internal Combustion Engines, SAE Inc., 1999
4. Colin R Ferguson , Internal Combustion Engines – Applied Thermo Sciences, John Wiley and Sons.
5. John B Heywood , Internal Combustion Engine Fundamentals, , McGraw Hill

Course Plan

Module	Contents	Hours	Sem. Exam Marks
I	Combustion Calculations: Heat of reaction at constant volume and constant pressure, Calculation of properties of the working medium in an engine, Constant volume and constant pressure adiabatic combustion, Calculation of Adiabatic flame temperature.	8	15%
II	Simulation of SI Engine Combustion: Engine kinematics, Ideal Otto cycle, SI engine simulation with adiabatic combustion with air as the working substance under full and part throttle conditions. Actual SI engine heat release rate curves.	7	20%
	FIRST INTERNAL EXAMINATION		

NEHRU COLLEGE OF ENGINEERING & RESEARCH CENTRE
PAMPADY THIRUVILWAMALA THRISSUR-DT

PRINCIPAL
Nehru College of
Engineering and Research Centre
Pampady, Thiruvilwamala, Thrissur Dt

III	Simulation of CI Engine Combustion: CI engine simulation with adiabatic combustion with air as the working substance under naturally aspirated, supercharged and turbocharged conditions. Zero dimensional combustion models for CI engines	7	20%
IV	Gas Exchange Processes: Flow through valves their characteristics, compressible and incompressible flow through valves, volumetric efficiency and Mach index, Effect of valve timing on volumetric efficiency, Swirl and squish, SI engine simulation with gas exchange, influence of valve timing and area.	7	20%
SECOND INTERNAL EXAMINATION			
V	Two stroke engine scavenging parameters like delivery ratio, scavenging efficiency, trapping efficiency. Perfect displacement and perfect mixing models for scavenging. Port diagrams and two stroke engine simulation	7	15%
VI	Heat Transfer and Friction in Engines: Engine friction variation, models for engine friction, Heat transfer mechanisms in engines, Models for heat transfer in engines.	6	10%
END SEMESTER EXAM			

Question Paper Pattern

Maximum marks: 100 Time: 3 hours

The question paper shall consist of three parts

Part A
4 questions uniformly covering modules I and II. Each question carries 10 marks
Students will have to answer any three questions out of 4 (3X10 marks =30 marks)

Part B
4 questions uniformly covering modules III and IV. Each question carries 10 marks
Students will have to answer any three questions out of 4 (3X10 marks =30 marks)

Part C
6 questions uniformly covering modules V and VI. Each question carries 10 marks
Students will have to answer any four questions out of 6 (4X10 marks =40 marks)

Note: In all parts, each question can have a maximum of four sub questions, if needed

NEHRU COLLEGE OF ENGINEERING & RESEARCH CENTRE
PANPADY THIRUVILWAMALA THRISSUR-DT

PRINCIPAL
Nehru College of
Engineering and Research Centre
Panpady, Thiruvilwamala, Thrissur Dt
Pin 680 587, Kerala

Course code.	Course Name	L-T-P - Credits	Year of Introduction
AU410	Vehicle Transport and Fleet Management	3-0-0-3	2016

Prerequisite : Nil

Course Objectives

- To give the basic idea on the vehicle transport system and the control of fleet.
- To get basic idea to implement effective and efficient transport system.

Syllabus

Mass transport system - Bus depot organisation structure -Route planning and Scheduling: Vehicle maintenance, supply management and budget - Fleet Management, Data Processing and Fare Structure - Motor vehicle act

Expected outcome.

Upon completion of the course, students will

- Be able to understand the structure of management system in the transportation.
- Get the basic knowledge about the various motor vehicle regulations and acts.

Text Books:

1. Kadiyali.L.R., " Traffic engineering and Transport Planning ".
2. John Dolu, "Fleet management ", McGraw-Hill Co., 1984.

References:

1. Goverment Publication, "The Motor vehicle Act ", 1989.
2. Kitchin.L.D., " Bus operation ", Illiffe and Sons Ltd., London, III Edition, 1992.
3. Rev. W. Faulks -Road and Coach Operation

Course Plan

Module	Contents	Hours	Sem. Exam Marks
I	Introduction to Mass transport system - Modes of transport, types of transport- Organization and management- Forms of ownership, principle of transport, management, internal organization, centralized & decentralized . Transport organization structure, operations, General set up, transport industry, government / (STU) State Government Undertakings and private Bus transport organizations.	7	15%
II	Bus depot organisation structure. Truck fleet operator's organization. Economics of Road Transport: Theory of fares and cost of services, fare charging, costing and statistics of operating cost - Driver checklist - Lists for driver and mechanic - Trip leasing. Vehicle schedule, booking and reservation, statistical records and shipment centre, recording of goods transport.	7	15%
FIRST INTERNAL EXAMINATION			
III	Route planning and Scheduling: Sources of traffic, town planning, turning points, stopping places, survey of rout, factors affecting frequency, direction of traffic flow, estimated traffic possibility. time table layout, use of flat graph method, preparation of vehicle and crew schedules, duty roaster, use of vehicle running numbers, determination of vehicle efficiency, checking efficiency of crew, duty arrangements, duty of drivers and conductors.	7	15%

NEHRU COLLEGE OF ENGINEERING AND RESEARCH CENTRE
LIBRARY THIRUVILWAMALA THRISSUR DT

PRINCIPAL
Nehru College of
Engineering and Research Centre
Pampady, Thiruvilwamala, Thrissur Dt
Pin 680 597 Kerala

IV	Vehicle maintenance, supply management and budget: Scheduled and unscheduled maintenance - Planning and scope - Evaluation of PMI programme – Work scheduling - Overtime - Breakdown analysis - Control of repair backlogs - Cost of options. Cost of inventory - Balancing inventory cost against downtime - Parts control - Bin tag systems – Time management - Time record keeping - Budget activity - Capital expenditures - Classification of vehicle expenses.	7	15%
SECOND INTERNAL EXAMINATION			
V	Fleet Management, Data Processing And Fare Structure : Fleet management and data processing - Data processing systems - Software Model – Computer controlling of fleet activity - Energy management, Basis of fares, effect of competition and control, calculating average charge, zone systems, straight and tapered scales fare structure - Methods of fare collection - Preparation of fare table.	8	20%
VI	Motor vehicle act: Importance of motor vehicle act, Schedules and sections - Registration of motor vehicles - Licensing of drivers - Control of permits - Limits of speed - traffic signs - Constructional regulations - types of driving licenses, procedure for obtaining driving license, registration of vehicle, types of permits, procedure for obtaining permits, third party insurance,Insurance & Finance Classes/types of insurance. Pollution Under control certification agency. Authority & procedure for PUC certification agency.	8	20%
END SEMESTER EXAM			

Question Paper Pattern

Maximum marks: 100 Time: 3 hrs

The question paper should consist of three parts

Part A
4 questions uniformly covering modules I and II. Each question carries 10 marks
Students will have to answer any three questions out of 4 (3X10 marks =30 marks)

Part B
4 questions uniformly covering modules III and IV. Each question carries 10 marks
Students will have to answer any three questions out of 4 (3X10 marks =30 marks)

Part C
6 questions uniformly covering modules V and VI. Each question carries 10 marks
Students will have to answer any four questions out of 6 (4X10 marks =40 marks)

Note: In all parts each question can have a maximum of four sub questions, if needed.

NEHRU COLLEGE OF ENGINEERING & RESEARCH CENTRE
PANIPADY THIRUVILWAMALA THRISSUR DT.

PRINCIPAL
Nehru College of
Engineering and Research Centre
Panipady, Thiruvilwamala, Thrissur Dt
Pin 680 597 Kerala

Course code	Course Name	L-T-P – Credits	Year of Introduction
AU462	VEHICLE MAINTENANCE	3-0-0-3	2016

Prerequisite : Nil

Course Objectives

- To impart knowledge on maintenance of vehicles to give maximum life for vehicles
- To identify various troubles occurred for the vehicles from the symptoms shown.

Syllabus

Maintenance schedule, importance of maintenance, repair of chassis, repair of various drive train components, engine overhauling, auxiliary systems repair, introduction to the maintenance of new generation vehicles, introduction to on board diagnostics.

Expected outcome.

- The students will be able to identify the troubles of the vehicles from the symptoms shown.

Text Book:

1. A W. Judge, Maintenance of high speed diesel engine, Chapmann Hall Ltd.
2. Boyce Dwiggins , Automobile Repair guide, Theodor Audel and Co., Indiana, 1978.

References

1. A. W. Judge – Motor vehicle engine servicing 3rd edition, Pitman paper mark, London, 1969.
2. Vehicle service manuals of reputed manufacturers.
3. William B Ribbens – Understanding automotive electronics , Newnes, 2003

Course Plan

Module	Contents	Hours	Sem. Exam Marks
I	Maintenance, Records and schedules: Importance of maintenance, types of maintenance, inspection, schedule, maintenance, log sheets, servicing, requirements of service station, layout and personnel for service station.	7	15%
II	Maintenance and repair of chassis: Servicing of clutch assembly, gearbox and propeller shaft, troubles and trouble shooting on transmission, differential maintenance and repair, backlash adjustment, servicing of braking system, identification and rectification of brake faults, brake testing steering system, maintenance, tyre rotation, tyre retreading, checking and adjusting, suspension, wheel balancing, wheel alignment.	7	15%
FIRST INTERNAL EXAMINATION			
III	Engine overhauling and repair: Reconditioning of engine, specific tools used for overhauling, de-carbonizing and degreasing, engine tune up, valve reconditioning, use of automobile stethoscope, troubles and troubleshooting related to engines.	7	15%
IV	Vehicle body repair and maintenance, minor panel beating, dolly blocks, tinkering, body painting, maintenance of body trim, specific tools for body repair, methods of towing a vehicle and disadvantages.	7	15%

Principal
Nehru College of
Engineering and Research Centre
Pampady, Thiruvilwamala, Thrissur Dt
Pin 680 597 Kerala

SECOND INTERNAL EXAMINATION			
V	Maintenance of auxiliaries: Maintenance of starter motor and dynamo or alternator, battery maintenance, methods of testing various electrical accessories and other accessories, radiator service, anticorrosion additives, engine oil change, preventive maintenance.	7	20%
VI	Introduction to maintenance of new generation vehicles- On board Diagnostics- software tools used for the error diagnostics in new generation vehicles- common types of sensor errors- procedure of on board diagnostics.	7	20%
END SEMESTER EXAM			

Question Paper Pattern

Maximum marks: 100 Time: 3 hours

The question paper shall consist of three parts

Part A
4 questions uniformly covering modules I and II. Each question carries 10 marks
Students will have to answer any three questions out of 4 (3X10 marks =30 marks)

Part B
4 questions uniformly covering modules III and IV. Each question carries 10 marks
Students will have to answer any three questions out of 4 (3X10 marks =30 marks)

Part C
6 questions uniformly covering modules V and VI. Each question carries 10 marks
Students will have to answer any four questions out of 6 (4X10 marks=40 marks)

Note: In all parts, each question can have a maximum of four sub questions, if needed

NEHRU COLLEGE OF ENGINEERING & RESEARCH CENTRE
PAMPADY THIRUVILWAMALA THRISSUR DT.

PRINCIPAL
Nehru College of
Engineering and Research Centre
Pampady, Thiruvilwamala, Thrissur Dt
Pin - 680 597, Kerala

NEHRU COLLEGE OF ENGINEERING AND RESEARCH CENTRE
(NAAC Accredited)
(Approved by AICTE, Affiliated to APJ Abdul Kalam Technological University, Kerala)

Computer Science and Engineering

MAT 101	LINEAR ALGEBRA AND CALCULUS	CATEGORY	L	T	P	CREDIT	Year of Introduction
		BSC	3	1	0	4	2019

Preamble: This course introduces students to some basic mathematical ideas and tools which are at the core of any engineering course. A brief course in Linear Algebra familiarises students with some basic techniques in matrix theory which are essential for analysing linear systems. The calculus of functions of one or more variables taught in this course are useful in modelling and analysing physical phenomena involving continuous change of variables or parameters and have applications across all branches of engineering.

Prerequisite: A basic course in one-variable calculus and matrix theory.

Course Outcomes: After the completion of the course the student will be able to

CO 1	solve systems of linear equations, diagonalize matrices and characterise quadratic forms
CO 2	compute the partial and total derivatives and maxima and minima of multivariable functions
CO 3	compute multiple integrals and apply them to find areas and volumes of geometrical shapes, mass and centre of gravity of plane laminas
CO 4	perform various tests to determine whether a given series is convergent, absolutely convergent or conditionally convergent
CO 5	determine the Taylor and Fourier series expansion of functions and learn their applications.

Mapping of course outcomes with program outcomes

	PO 1	PO 2	PO 3	PO 4	PO 5	PO 6	PO 7	PO 8	PO 9	PO 10	PO 11	PO 12
CO 1	3	3	3	3	2	1			1	2		2
CO 2	3	3	3	3	2	1			1	2		2
CO 3	3	3	3	3	2	1			1	2		2
CO 4	3	2	3	2	1	1			1	2		2
CO 5	3	3	3	3	2	1			1	2		2

Assessment Pattern

Bloom's Category	Continuous Assessment Tests		End Semester Examination (Marks)
	Test 1 (Marks)	Test 2 (Marks)	
Remember	10	10	20
Understand	20	20	40
Apply	20	20	40
Analyse			
Evaluate			
Create			

NEHRU COLLEGE OF ENGINEERING & RESEARCH CENTRE THIRUVILWAMALA THRISSUR-DT

PRINCIPAL
Nehru College of
Engineering and Research Centre
Pampady, Thiruvilwamala, Thrissur Dt
Pin 680 597 Kerala

Mark distribution

Total Marks	CIE marks	ESE marks	ESE Duration
150	50	100	3 hours

Continuous Internal Evaluation Pattern:

Attendance : 10 marks
Continuous Assessment Test (2 numbers) : 25 marks
Assignment/Quiz/Course project : 15 marks
Assignments: Assignment should include specific problems highlighting the applications of the methods introduced in this course in science and engineering.

End Semester Examination Pattern: There will be two parts; Part A and Part B. Part A contain 10 questions with 2 questions from each module, having 3 marks for each question. Students should answer all questions. Part B contains 2 questions from each module of which student should answer any one. Each question can have maximum 2 sub-divisions and carry 14 marks.

Course Level Assessment Questions

Course Outcome 1 (CO1): Solve systems of linear equations, diagonalize matrices and characterise quadratic forms

1. A is a real matrix of order $3 \times 3$and $X = \begin{bmatrix} x \\ y \\ z \end{bmatrix}$. What can you say about the solution of $AX = 0$if rank of A is 1? 2 ?3?
2. Given$A = \begin{vmatrix} 3 & 0 & 2 \\ 0 & 2 & 0 \\ -2 & 0 & 0 \end{vmatrix}$, find an orthogonal matrix Pthat diagonalizes A.
3. Find out what type of conic section the following quadratic form represents

$$17x^2 - 30x_1x_2 + 17x_2^2 = 128$$

4. The matrix $A = \begin{vmatrix} -2 & 2 & -3 \\ 2 & 1 & -6 \\ -1 & -2 & 0 \end{vmatrix}$has an eigen value5 with corresponding Eigen vector$X = \begin{bmatrix} 1 \\ 2 \\ -1 \end{bmatrix}$. Find A^5X

Course Outcome 2 (CO2): compute the partial and total derivatives and maxima and minima of multivariable functions

1. Find the slope of the surface $z = x^2y + 5y^3$in the x-direction at the point (1,-2)

NEHRU COLLEGE OF ENGINEERING & RESEARCH CENTRE
PAMPADY, THIRUVILWAMALA, THRISSUR-DT

PRINCIPAL
Nehru College of
Engineering and Research Centre
Pampady, Thiruvilwamala, Thrissur Dt
Pin - 680 588, Kerala

2. Given the function $w = xy + z$, use chain rule to find the instantaneous rate of change of $w$at each point along the curve $x = cost, y = sint, z = t$

3. Determine the dimension of rectangular box open at the top , having a volume 32 cubic ft and requiring the least amount of material for it's construction.

Course Outcome 3(CO3): compute multiple integrals and apply them to find areas and volumes of geometrical shapes, mass and centre of gravity of plane laminas.

1. Evaluate $\iint_D (x + 2y)\, DA$where D is the region bounded by the parabolas $y = 2x^2$and $y = 1 + x^2$

2. Explain how you would find the volume under the surface $z = f(x, y)$and over a specific region Din the xyplane using (i) double integral (ii) triple integral?

3. Find the mass and centre of gravity of a triangular lamina with vertices (0,0), (2,1), (0,3) if the density function is $f(x, y) = x + y$

4. Use spherical coordinates to evaluate $\iiint_B (x^2 + y^2 + z^2)^3\, dV$where B is the unit ball defined by $B = \{(x, y, z): x^2 + y^2 + z^2 \leq 1\}$

Course Outcome 4 (CO4): perform various tests to determine whether a given series is convergent, absolutely convergent or conditionally convergent.

1. What is the difference between a sequence and a series and when do you say that they are convergent? Divergent?

2. Determine whether the series $\sum_{n=1}^{n=\infty} \frac{5}{2n^2+4n+3}$converges or diverges.

3. Is the series $\sum_{n=1}^{n=\infty} \frac{(-1)^{n-1}}{n}$convergent? Absolutely convergent? Conditionally convergent?

Course Outcome 5 (CO5): determine the Taylor and Fourier series expansion of functions and learn their applications.

1. Assuming the possibility of expansion find the Maclaurin series expansion of

   $f(x) = (1 + x)^k$for$|x| < 1$where $k$is any real number. What happens if $k$is a positive integer?

2. Use Maclaurin series of $ln(1 + x), -1 < x \leq 1$to find an approximate value of$ln2$.

3. Find the Fourier series of the function$f(x) = x^2, -2 \leq x < 2, f(x + 4) = f(x)$. Hence using Parseval's identity prove that $1 + \frac{1}{2^4} + \frac{1}{3^4} + \ldots = \frac{\pi^4}{90}$

4. Expand the function $f(x) = x\ (0 < x < 1/2)$ into a (i) Fourier sine series (ii) Fourier cosine series.

PRINCIPAL
Nehru College of
Engineering and Research Centre
Pampady Thiruvilwamala, Thrissur Dt
Pin 680 597 Kerala

NEHRU COLLEGE OF ENGINEERING & RESEARCH CENTRE
THIRUVILWAMALA, THRISSUR DT

Model Question paper

QP CODE: PAGES:3

Reg No:_____

Name :_____

APJ ABDUL KALAM TECHNOLOGICAL UNIVERSITY FIRST SEMESTER B.TECH DEGREE EXAMINATION, MONTH & YEAR

Course Code: **MAT 101**

Max. Marks: 100 **Duration: 3 Hours**

LINEAR ALGEBRA AND CALCULUs

(2019-Scheme)

(Common to all branches)

PART A

(Answer **all** questions, **each** question carries 3 marks)

1. Determine the rank of the matrix $A = \begin{vmatrix} 1 & 2 & -1 \\ -2 & -4 & 2 \\ 3 & 6 & -3 \end{vmatrix}$.
2. Write down the eigen values of $= \begin{bmatrix} 2 & 0 \\ 0 & -1 \end{bmatrix}$. What are the eigen values of $P^{-1}AP$ where $P = \begin{bmatrix} -4 & 2 \\ 3 & -1 \end{bmatrix}$?
3. Find $f_x(1,3)$ and $f_y(1,3)$ for the function $f(x,y) = 2x^3y^2 + 2y + 4x$.
4. Show that the function $u(x,t) = \sin(x - ct)$ is a solution of the equation $\frac{\partial^2 u}{\partial t^2} = c^2 \frac{\partial^2 u}{\partial x^2}$
5. Use double integral to find the area of the region enclosed between the parabolas $y = \frac{1}{2}x^2$ and the line $y = 2x$.
6. Use polar coordinates to evaluate the area of the region bounded by $x^2 + y^2 = 4$, the line $y = x$ and the y axis in the first quadrant
7. Test the convergence of the series $\sum_{k=1}^{\infty} \frac{k}{k+1}$.
8. Test the convergence of the alternating series $\sum_{k=1}^{\infty} (-1)^{k+1} \frac{1}{k}$ using Leibnitz test.
9. Find the Taylor series expansion of $sin\pi x$about$x = \frac{1}{2}$.
10. Find the values to which the Fourier series of

    $f(x) = x$for$-\pi < x < \pi$, with $f(x + 2\pi) = f(x)$ converges (10x3=30)

PART B

(Answer **one full** question from each module, each question carries **14** marks)

NEHRU COLLEGE OF ENGINEERING & RESEARCH CENTRE
THIRUVILWAMALA, THRISSUR-DT

PRINCIPAL
Nehru College of
Engineering and Research Centre
Pampady, Thiruvilwamala, Thrissur
Pin - 680 597, Kerala

Module -I

11. (a) Solve the following system of equations

$$y + z - 2w = 0$$
$$2x - 3y - 3z + 6w = 2$$
$$4x + y + z - 2w = 4$$

(b) Find the eigen values and eigen vectors of the matrix $\begin{vmatrix} -2 & 2 & -3 \\ 2 & 1 & -6 \\ -1 & -2 & 0 \end{vmatrix}$

12. (a) Diagonalize the matrix $\begin{vmatrix} -1 & 2 & -2 \\ 2 & 4 & 1 \\ 2 & 1 & 4 \end{vmatrix}$

(b) What kind of conic section the quadratic form $3x_1^2 + 22x_1x_2 + 3x_2^2 = 0$ represents? Transform it to principal axes.

Module - II

13. (a) Find the local linear approximation to $f(x,y) = \sqrt{x^2 + y^2}$ at the point $(3,4)$. Use it to approximate $f(3.04, 3.98)$

(b) Let $w = \sqrt{x^2 + y^2 + z^2}$, $x = cos\theta, y = sin\theta, z = tan\theta$. Use chain rule to find $\frac{aw}{d\theta}$ when $\theta = \frac{\pi}{4}$.

14. (a) Let $z = f(x,y)$ where $x = rcos\theta, y = rsin\theta$, prove that $\left(\frac{\partial z}{\partial x}\right)^2 + \left(\frac{\partial z}{\partial y}\right)^2 = \left(\frac{\partial z}{\partial r}\right)^2 + \frac{1}{r^2}\left(\frac{\partial z}{\partial \theta}\right)^2$.

(b) Locate all relative maxima, relative minima and saddle points $f(x,y) = xy + \frac{a^3}{x} + \frac{b^3}{y} (a \neq 0, b \neq 0)$.

Module - III

15. (a) Evaluate $\iint_D (2x^2y + 9y^3)\, dxdy$ where D is the region bounded by $y = \frac{2}{3}x$ and $y = 2\sqrt{x}$

(b) Evaluate $\int_0^4 \int_{\sqrt{y}}^2 e^{x^3}\, dxdy$ changing the order of integration.

16. (a) Find the volume of the solid bounded by the cylinder $x^2 + y^2 = 4$ and the planes $y + z = 4$ and $z = 0$..

(b) Evaluate $\iiint \sqrt{1 - x^2 - y^2 - z^2}\, dxdydz$, taken throughout the volume of the sphere $x^2 + y^2 + z^2 = 1$, by transforming to spherical polar coordinates

Module - IV

17. (a) Test the convergence of the series

(i) $\sum_{k=1}^{\infty} \frac{k^k}{k!}$ (ii) $\sum_{k=2}^{\infty} \left(\frac{4k-5}{2k+1}\right)^k$

(b) Determine the convergence or divergence of the series $\sum_{k=1}^{\infty} (-1)^k \frac{(2k-1)!}{3^k}$

18. (a) Check whether the series $\sum_{k=1}^{\infty} (-1)^{k+1} \frac{(2k)!}{(3k-2)!}$ is absolutely convergent, conditionally convergent or divergent.

(b) Test the convergence of the series $1 + \frac{1.2}{1.3} + \frac{1.2.3}{1.3.5} + \frac{1.2.3.4}{1.3.5.7} + \cdots$

NEHRU COLLEGE OF ENGINEERING & RESEARCH CENTRE THIRUVILWAMALA, THRISSUR

PRINCIPAL
Nehru College of
Engineering and Research Centre
Pampady, Thiruvilwamala, Thrissur Dt
Pin - 680

Module - V

19. (a) Obtain the Fourier series of for $f(x) = e^{-x}$, in the interval $0 < x < 2\pi$.with $f(x + 2\pi) = f(x)$. Hence deduce the value of $\sum_{n=2}^{\infty} \frac{(-1)^n}{1+n^2}$.

(b) Find the half range sine series of $f(x) = \begin{cases} \frac{2kL}{\pi} & if\ 0 < x < \frac{L}{2} \\ \frac{2k(L-x)}{L} & if\ \frac{L}{2} < x < L \end{cases}$

20. (a)Expand $(1 + x)^{-2}$.as a Taylor series about $x = 0$and state the region of convergence of the series.

(b) Find the Fourier series for $f(x) = x^2$ in the interval $-\pi < x < \pi$

with $f(x + 2\pi) = f(x)$.Hence show that $\frac{1}{1^4} + \frac{1}{2^4} + \frac{1}{3^4} + \cdots = \frac{\pi^4}{90}$. (14X5=70)

NEHRU COLLEGE OF ENGINEERING & RESEARCH CENTRE
THIRUVILWAMALA, THRISSUR

PRINCIPAL
Nehru College of
Engineering and Research Centre
Pampady, Thiruvilwamala, Thrissur Dt
Pin - 680 597, Kerala

Syllabus

Module 1 (Linear algebra)

(Text 2: Relevant topics from sections 7.3, 7.4, 7.5, 8.1,8.3,8.4)

Systems of linear equations, Solution by Gauss elimination, row echelon form and rank of a matrix, fundamental theorem for linear systems (homogeneous and non-homogeneous, without proof), Eigen values and eigen vectors. Diagonaliztion of matrices, orthogonal transformation, quadratic forms and their canonical forms.

Module 2 (multivariable calculus-Differentiation)

(Text 1: Relevant topics from sections 13.3, 13.4, 13.5, 13.8)

Concept of limit and continuity of functions of two variables, partial derivatives, chain rule, total derivative, Relative maxima and minima, Absolute maxima and minima on closed and bounded set.

Module 3(multivariable calculus-Integration)

(Text 1: Relevant topics from sections 14.1, 14.2, 14.3, 14.5, 14.6, 14.8)

Double integrals (Cartesian), reversing the order of integration, Change of coordinates (Cartesian to polar), finding areas and volume using double integrals, mass and centre of gravity of inhomogeneous laminas using double integral. Triple integrals, volume calculated as triple integral, triple integral in cylindrical and spherical coordinates (computations involving spheres, cylinders).

Module 4 (sequences and series)

(Text 1: Relevant topics from sections 9.1, 9.3, 9.4, 9.5, 9.6)

Convergence of sequences and series, convergence of geometric series and p-series(without proof), test of convergence (comparison, ratio and root tests without proof); Alternating series and Leibnitz test, absolute and conditional convergence.

Module 5 (Series representation of functions)

(Text 1: Relevant topics from sections 9.8, 9.9. Text 2: Relevant topics from sections 11.1, 11.2, 11.6)

Taylor series (without proof, assuming the possibility of power series expansion in appropriate domains), Binomial series and series representation of exponential, trigonometric, logarithmic functions (without proofs of convergence); Fourier series, Euler formulas, Convergence of Fourier series (without proof), half range sine and cosine series, Parseval's theorem (without proof).

Text Books

1. H. Anton, I. Biven,S.Davis, "Calculus", Wiley, 10th edition, 2015.
2. Erwin Kreyszig, Advanced Engineering Mathematics, 10thEdition, John Wiley & Sons, 2016.

NEHRU COLLEGE OF ENGINEERING & RESEARCH CENTRE
THIRUVILWAMALA, THRISSUR DT

PRINCIPAL
Nehru College of
Engineering and Research Centre
Pampady, Thiruvilwamala, Thrissur Dt
Pin 680 597 Kerala

Reference Books

1. J. Stewart, Essential Calculus, Cengage, 2nd edition, 2017
2. G.B. Thomas and R.L. Finney, Calculus and Analytic geometry, 9 th Edition, Pearson, Reprint, 2002.
3. Peter V. O'Neil, Advanced Engineering Mathematics , Cengage, 7th Edition, 2012
4. Veerarajan T., Engineering Mathematics for first year, Tata McGraw-Hill, New Delhi, 2008.
5. B.S. Grewal, Higher Engineering Mathematics, Khanna Publishers, 36 Edition, 2010.

Course Contents and Lecture Schedule

No	Topic	No. of Lectures
1	**Linear Algebra (10 hours)**	
1.1	Systems of linear equations, Solution by Gauss elimination	1
1.2	Row echelon form, finding rank from row echelon form, fundamental theorem for linear systems	3
1.3	Eigen values and eigen vectors	2
1.4	Diagonaliztion of matrices, orthogonal transformation, quadratic forms and their canonical forms.	4
2	**Multivariable calculus-Differentiation (8 hours)**	
2.1	Concept of limit and continuity of functions of two variables, partial derivatives	2
2.2	Differentials, Local Linear approximations	2
2.3	Chain rule, total derivative	2
2.4	Maxima and minima	2
3	**Multivariable calculus-Integration (10 hours)**	
3.1	Double integrals (Cartesian)-evaluation	2
3.2	Change of order of integration in double integrals, change of coordinates (Cartesian to polar),	2
3.3	Finding areas and volumes, mass and centre of gravity of plane laminas	3
3.4	Triple integrals	3
4	**Sequences and series (8 hours)**	

NEHRU COLLEGE OF ENGINEERING & RESEARCH CENTRE

PRINCIPAL
Nehru College of
Engineering and Research Centre
Pampady Thiruvilwamala Thrissur Dt
Pin - 680 597 Kerala

4.1	Convergence of sequences and series, geometric and p-series	2
4.2	Test of convergence(comparison, ratio and root)	4
4.3	Alternating series and Leibnitz test, absolute and conditional convergence	2
5	**Series representation of functions (9 hours)**	
5.1	Taylor series, Binomial series and series representation of exponential, trigonometric, logarithmic functions;	3
5.2	Fourier series, Euler formulas, Convergence of Fourier series(Dirichlet's conditions)	3
5.3	Half range sine and cosine series, Parseval's theorem.	3

NEHRU COLLEGE OF ENGINEERING & RESEARCH CENTRE
THIRUVILWAMALA, THRISSUR

PRINCIPAL
Nehru College of
Engineering and Research Centre
Pampady Thiruvilwamala Thrissur Dt
Pin 680 597 Kerala

PHT 100	ENGINEERING PHYSICS A (FOR CIRCUIT BRANCHES)	CATEGORY	L	T	P	CREDIT	YEAR OF INTRODUCTION
		BSC	3	1	0	4	2019

Preamble: The aim of the Engineering Physics Program is to offer students a solid background in the fundamentals of Physics and to impart that knowledge in engineering disciplines. The program is designed to develop scientific attitudes and enable the students to correlate the concepts of Physics with the core programmes

Prerequisite: Higher secondary level Physics, Mathematical course on vector calculus, differential equations and linear algebra

Course Outcomes: After the completion of the course the student will be able to

CO 1	Compute the quantitative aspects of waves and oscillations in engineering systems.
CO 2	Apply the interaction of light with matter through interference, diffraction and identify these phenomena in different natural optical processes and optical instruments.
CO 3	Analyze the behaviour of matter in the atomic and subatomic level through the principles of quantum mechanics to perceive the microscopic processes in electronic devices.
CO 4	Classify the properties of magnetic materials and apply vector calculus to static magnetic fields and use Maxwell's equations to diverse engineering problems
CO 5	Analyze the principles behind various superconducting applications, explain the working of solid state lighting devices and fibre optic communication system

Mapping of course outcomes with program outcomes

	PO 1	PO 2	PO 3	PO 4	PO 5	PO 6	PO 7	PO 8	PO 9	PO 10	PO 11	PO 12
CO 1	3	2						1	2			1
CO 2	3	2						1	2			1
CO 3	3	2						1	2			1
CO 4	3	1						1	2			1
CO 5	3	1						1	2			1

Assessment Pattern

Bloom's Category	Continuous Assessment Tests		End Semester Examination (Marks)
	Test 1 (Marks)	Test 2 (Marks)	
Remember	15	15	30
Understand	25	25	50
Apply	10	10	20

NEHRU COLLEGE OF ENGINEERING & RESEARCH CENTRE THRISSUR

PRINCIPAL
Nehru College of
Engineering and Research Centre
Pampady Thiruvilwamala, Thrissur Dt
Pin 680 597 Kerala

DOWNLOADED FROM KTUASSIST.IN

Analyse			
Evaluate			
Create			

Mark distribution

Total Marks	CIE marks	ESE marks	ESE Duration
150	50	100	3 hours

Continuous Internal Evaluation Pattern:

Attendance : 10 marks
Continuous Assessment Test (2 numbers) : 25 marks
Assignment/Quiz/Course project : 15 marks

End Semester Examination Pattern: There will be two parts; Part A and Part B. Part A contain 10 questions with 2 questions from each module, having 3 marks for each question. Students should answer all questions. Part B contains 2 questions from each module of which student should answer any one. Each question can have maximum 2 sub-divisions and carry 14 marks.

Course Level Assessment Questions

Course Outcome 1 (CO1):

1. Explain the effect of damping force on oscillators.
2. Distinguish between transverse and longitudinal waves.
3. (a) Derive an expression for the fundamental frequency of transverse vibration in a stretched string.

   (b) Calculate the fundamental frequency of a string of length 2 m weighing 6 g kept stretched by a load of 600 kg.

Course Outcome 2 (CO2):

1. Explain colours in thin films.
2. Distinguish between Fresnel and Fraunhofer diffraction.
3. (a) Explain the formation of Newton's rings and obtain the expression for radii of bright and dark rings in reflected system. Also explain how it is used to determine the wavelength of a monochromatic source of light.

   (b) A liquid of refractive index μ is introduced between the lens and glass plate.

NEHRU COLLEGE OF ENGINEERING & RESEARCH CENTRE
THIRUVILWAMALA, THRISSUR-DT

PRINCIPAL
Nehru College of
Engineering and Research Centr
Pampady, Thiruvilwamala, Thrissur Dt
Pin 680 597 Kerala

DOWNLOADED FROM KTUASSIST.IN

What happens to the fringe system? Justify your answer.

Course Outcome 3 (CO3):

1. Give the physical significance of wave function ?

2. What are excitons ?

3. (a) Solve Schrodinger equation for a particle in a one dimensional box and obtain its energy eigen values and normalised wave functions.

   (b) Calculate the first three energy values of an electron in a one dimensional box of width 1 A^0 in electron volt.

Course Outcome 4 (CO4):

1. Compare displacement current and conduction current.

2. Mention any four properties of ferro magnetic materials.

3. (a) Starting from Maxwell's equations, derive the free space electromagnetic wave equation and show that velocity of electromagnetic wave is $1/(\mu_o \varepsilon_o)^{1/2}$

   (b) An electromagnetic wave is described by $E = 100 \exp 8\pi i [10^{14} t - (10^6 z / 3)]$ V/m. Find the direction of propagation of the wave,speed of the wave and magnetic flux density in the wave.

Course Outcome 5 (CO5):

1. Explain the working of a solar cell.

2. Distinguish between Type I and Type II super conductors.

3. (a) Define numerical aperture and derive an expression for it.

   (b) Explain the working of intensity modulated fibre optic sensor.

NEHRU COLLEGE OF ENGINEERING & RESEARCH CENTRE THRISSUR

PRINCIPAL
Nehru College of
Engineering and Research Centre
Pampady, Thiruvilwamala, Thrissur D
Pin - 680 597 Kerala

DOWNLOADED FROM KTUASSIST.IN

Model Question paper

QP CODE: PAGES:3

Reg No:_____

Name :_____

APJ ABDUL KALAM TECHNOLOGICAL UNIVERSITY FIRST SEMESTER B.TECH DEGREE EXAMINATION, MONTH & YEAR

Course Code: PHT 100

Course Name: Engineering Physics A

Max. Marks: 100 **Duration: 3 Hours**

PART A

Answer all Questions. Each question carries 3 Marks

1. Compare electrical and mechanical oscillators
2. Distinguish between longitudinal and transverse waves
3. Write a short note on antireflection coating.
4. Diffraction of light is not as evident in daily experience as that of sound waves. Give reason.
5. State and explain Heisenberg's Uncertainty principle. With the help of it explain natural line broadening.
6. Explain surface to volume ratio of nanomaterials.
7. State Faraday's laws of electromagnetic induction.
8. Compare displacement current and conduction current
9. List four important applications of superconductors.
10. Give the working principle of LED. (10x3=30)

PART B

Answer any one full question from each module. Each question carries 14 Marks

Module 1

NEHRU COLLEGE OF ENGINEERING & RESEARCH CENTRE THIRUVILWAMALA, THRISSUR-DT

PRINCIPAL
Nehru College of
Engineering and Research Centre
Pampady, Thiruvilwamala, Thrissur Dt.
Pin 680 597 Kerala

DOWNLOADED FROM KTUASSIST.IN

11. (a) Derive the differential equation of damped harmonic oscillator and deduce its solution.Discuss the cases of over damped, critically damped and under damped cases. (10)

(b) The frequency of a tuning fork is 500 Hz and its Q factor is 7×10^4 Find the relaxation time. Also calculate the time after which its energy becomes 1/10 of its initial undamped value.(4)

12. (a) Derive an expression for the velocity of propagation of a transverse wave in a stretched string. Deduce laws of transverse vibrations. (10)

(b) The equation of transverse vibration of a stretched string is given by y =0.00327 sin (72.1x-2.72t)m, in which the numerical constants are in S.I units. Evaluate (i) Amplitude (ii) Wavelength (iii) Frequency and (iv)Velocity of the wave. (4)

Module 2

13.(a)Explain the formation of Newton's rings and show that the radius of dark ring is proportional to the square root of natural numbers. How can we use Newton's rings experiment to determine the refractive index of a liquid. (10)

(b) Two pieces of plane glass are placed together with a piece of paper between two at one end. Find the angle of the wedge in seconds if the film is viewed with a monochromatic light of wavelength 4800Å. Given $\beta = 0.0555$ cm. (4)

14. (a) Explain the diffraction due to a plane transmission grating. Obtain the grating equation. (10)

(b) A grating has 6000 lines per cm. Find the angular separation of the two yellow lines of mercury of wavelengths 577 nm and 579 nm in the second order. (4)

Module 3

15.(a) Derive time dependent and independent Schrodinger equations. (10)

(b) An electron is confined to one dimensional potential box of length 2Å. Calculate the energies corresponding to the first and second quantum states in eV. (4)

16.(a) Classify nanomaterials based on dimensionality of quantum confinement and explain the following nanostructures. (i) nano sheets (ii) nano wires (iii) quantum dots. (10)

(b) Find the de Broglie wavelength of electron whose kinetic energy is 15 eV. (4)

Module 4

17.(a) State Poynting's Theorem. Calculate the value of Poynting vector at the surface of the sun if the power radiated by the sun is 3.8×10^{26} W and its radius is 7×10^{8} m. (5)

NEHRU COLLEGE OF ENGINEERING & RESEARCH CENTRE THIRUVILWAMALA THRISSUR

PRINCIPAL
Nehru College of Engineering and Research Centre
Pampady, Thiruvilwamala
Dist. 680 597 Kerala

DOWNLOADED FROM KTUASSIST.IN

(b) Distinguish between paramagnetic, diamagnetic and ferromagnetic materials. (9)

18.(a) Starting from Maxwell's Equations, derive electromagnetic wave equations in free space. (10)

(b) If the magnitude of **H** in a plane wave is 1 A/m, find the magnitude of **E** in free space. (4)

Module 5

19.(a) Show that superconductors are perfect diamagnets. Distinguish between Type I and Type II superconductors with suitable examples. (10)

(b) Write a short note on high temperature superconductors. (4)

20.(a) Define numerical aperture of an optic fibre and derive an expression for the NA of a step index fibre with a neat diagram. (10)

(b) Calculate the numerical aperture and acceptance angle of a fibre with a core refractive index of 1.54 and a cladding refractive index of 1.50 when the fibre is inside water of refractive index 1.33. (4) (14x5=70)

NEHRU COLLEGE OF ENGINEERING & RESEARCH CENTRE THRISSUR

PRINCIPAL
Nehru College of
Engineering and Research Centre
Pampady Thiruvilwamala, Thrissur Dt
Pin 680 597 Kerala

DOWNLOADED FROM KTUASSIST.IN

Syllabus

ENGINEERING PHYSICS A
(FOR CIRCUIT BRANCHES)

Module 1
Oscillations and Waves
Harmonic oscillations, Damped harmonic motion-Derivation of differential equation and its solution, Over damped, Critically damped and Under damped Cases, Quality factor-Expression, Forced oscillations-Differential Equation-Derivation of expressions for amplitude and phase of forced oscillations, Amplitude Resonance-Expression for Resonant frequency, Quality factor and Sharpness of Resonance, Electrical analogy of mechanical oscillators

Wave motion- Derivation of one dimensional wave equation and its solution, Three dimensional wave equation and its solution (no derivation), Distinction between transverse and longitudinal waves, Transverse vibration in a stretched string, Statement of laws of vibration

Module 2
Wave Optics
Interference of light-Principle of superposition of waves, Theory of thin films - Cosine law (Reflected system), Derivation of the conditions of constructive and destructive Interference, Interference due to wedge shaped films -Determination of thickness and test for optical planeness, Newton's rings - Measurement of wavelength and refractive index, Antireflection coatings

Diffraction of light, Fresnel and Fraunhofer classes of diffraction, Diffraction grating-Grating equation, Rayleigh criterion for limit of resolution, Resolving and Dispersive power of a grating with expression (no derivation)

Module 3
Quantum Mechanics & Nanotechnology
Introduction for the need of Quantum mechanics, Wave nature of Particles, Uncertainty principle, Applications-Absence of electrons inside a nucleus and Natural line broadening mechanism, Formulation of time dependent and independent Schrodinger wave equations-Physical meaning of wave function, Particle in a one dimensional box- Derivation for normalised wave function and energy eigen values, Quantum Mechanical Tunnelling (Qualitative)

Introduction to nanoscience and technology, Increase in surface to volume ratio for nanomaterials, Quantum confinement in one dimension, two dimension and three dimension-Nano sheets, Nano wires and Quantum dots, Properties of nanomaterials-mechanical, electrical and optical, Applications of nanotechnology (qualitative ideas)

Module 4
Magnetism & Electro Magnetic Theory
Magnetic field and Magnetic flux density, Gauss's law for Magnetic flux density, Ampere's Circuital law, Faraday's law in terms of EMF produced by changing magnetic flux, Magnetic permeability and susceptibility, Classification of magnetic materials-para, dia and ferromagnetic materials

NEHRU COLLEGE OF ENGINEERING & RESEARCH CENTRE THIRUVILWAMALA, THRISSUR-680 141

PRINCIPAL
Nehru College of Engineering and Research Centre
Pampady

DOWNLOADED FROM KTUASSIST.IN

Fundamentals of vector calculus, concept of divergence, gradient and curl along with physical significance, Line, Surface and Volume integrals, Gauss divergence theorem & Stokes' theorem, Equation of continuity, Derivation of Maxwell's equations in vacuum, Comparison of displacement current with conduction current. Electromagnetic waves, Velocity of Electromagnetic waves in free space, Flow of energy and Poynting's vector (no derivation)

Module 5

Superconductivity & Photonics

Superconducting phenomena, Meissner effect and perfect diamagnetism, Types of superconductors-Type I and Type II, BCS Theory (Qualitative), High temperature superconductors-Applications of super conductivity

Introduction to photonics-Photonic devices-Light Emitting Diode, Photo detectors -Junction and PIN photodiodes, Solar cells-I-V Characteristics, Optic fibre-Principle of propagation of light, Types of fibres-Step index and Graded index fibres, Numerical aperture –Derivation, Fibre optic communication system (block diagram), Industrial, Medical and Technological applications of optical fibre, Fibre optic sensors-Intensity Modulated and Phase modulated sensors.

Text Books

1. M.N.Avadhanulu, P.G.Kshirsagar,TVS Arun Murthy "A Text book of Engineering Physics", S.Chand &Co., Revised Edition 2019

2. H.K.Malik , A.K. Singh, "Engineering Physics" McGraw Hill Education, Second Edition 2017

Reference Books

1. Arthur Beiser, "Concepts of Modern Physics ", Tata McGraw Hill Publications, 6th Edition 2003
2. D.K. Bhattacharya, Poonam Tandon, "Engineering Physics", Oxford University Press, 2015
3. Md.N.Khan & S.Panigrahi "Principles of Engineering Physics 1&2", Cambridge University Press, 2016
4. Aruldhas G., "Engineering Physics", PHI Pvt. Ltd., 2015
5. Ajoy Ghatak, "Optics", Mc Graw Hill Education, Sixth Edition, 2017
6. T. Pradeep, "Nano:The Essentials'', McGraw Hill India Ltd, 2007
7. Halliday, Resnick, Walker, "Fundamentals of Physics'', John Wiley & Sons.Inc, 2001
8. David J Griffiths, "Introduction to Electrodynamics'', Addison-Wesley publishing, 3rd Edition, 1999
9. Premlet B., "Advanced Engineering Physics", Phasor Books,10th edition,2017
10. I. Dominic and. A. Nahari, "A Text Book of Engineering physics", Owl Books Publishers, Revised edition, 2016

NEHRU COLLEGE OF ENGINEERING & RESEARCH CENTRE THRISSUR

DOWNLOADED FROM KTUASSIST.IN

PRINCIPAL
Nehru College of
Engineering and Research Centre
Pampady, Thiruvilwamala, Thrissur Dt
Pin 680 597 Kerala

Course Contents and Lecture Schedule

No	Topic	No. of Lectures
1	**Oscillations and Waves (9 hours)**	
1.1	Harmonic oscillations, Damped harmonic motion-Derivation of differential equation and its solution, Over damped, Critically damped and Under damped Cases, Quality factor-Expression	2 hrs
1.2	Forced oscillations-Differential Equation-Derivation of expressions for amplitude and phase of forced oscillations, Amplitude Resonance-Expression for Resonant frequency, Quality factor and Sharpness of Resonance, Electrical analogy of mechanical oscillators	3hrs
1.3	Wave motion- Derivation of one dimensional wave equation and its solution, Three dimensional wave equation and its solution (no derivation)	2 hrs
1.4	Distinction between transverse and longitudinal waves. Transverse vibration in a stretched string, Statement of laws of vibration	2 hrs
2	**Wave Optics (9 hours)**	
2.1	Interference of light-Principle of superposition of waves, Theory of thin films - Cosine law (Reflected system), Derivation of the conditions of constructive and destructive Interference	2 hrs
2.2	Interference due to wedge shaped films -Determination of thickness and test for optical planeness, Newton's rings - Measurement of wavelength and refractive index, Antireflection coatings	4 hr
2.3	Diffraction of light, Fresnel and Fraunhofer classes of diffraction, Diffraction grating-Grating equation	2 hrs
2.4	Rayleigh criterion for limit of resolution, Resolving and Dispersive power of a grating with expression (no derivation)	1 hr
3	**Quantum Mechanics &Nanotechnology (9hours)**	
3.1	Introduction for the need of Quantum mechanics, Wave nature of Particles, Uncertainty principle, Applications-Absence of electrons inside a nucleus and Natural line broadening mechanism	2 hrs
3.2	Formulation of time dependent and independent Schrodinger wave equations-Physical Meaning of wave function, Particle in a one dimensional box- Derivation for normalised wave function and energy eigen values, Quantum Mechanical Tunnelling (Qualitative)	4 hrs
3.3	Introduction to nanoscience and technology, Increase in surface to volume ratio for nanomaterials, Quantum confinement in one dimension, two dimension and three dimension-Nano sheets, Nano wires and Quantum dots	2 hrs
3.4	Properties of nanomaterials-mechanical, electrical and optical Applications of nanotechnology (qualitative ideas)	1 hr
4	**Magnetism & Electro Magnetic Theory (9 hours)**	
4.1	Magnetic field and Magnetic flux density, Gauss's law for Magnetic flux	2 hrs

NEHRU COLLEGE OF ENGINEERING & RESEARCH CENTRE
THIRUVILWAMALA, THRISSUR-DT

DOWNLOADED FROM KTUASSIST.IN

PRINCIPAL
Nehru College of
Engineering and Research Centre
Pampady, Thiruvilwamala, Thrissur, Kerala

	density, Ampere's Circuital law, Faraday's law in terms of EMF produced by changing magnetic flux	
4.2	Explanation for Magnetic permeability and susceptibility Classification of magnetic materials- para, dia and ferromagnetic materials	1 hr
4.3	Fundamentals of vector calculus, concept of divergence, gradient and curl along with physical significance, Line, Surface and Volume integrals, Gauss divergence theorem & Stokes' theorem	2 hrs
4.4	Equation of continuity, Derivation of Maxwell's equations in vacuum, Comparison of displacement current with conduction current. Electromagnetic waves, Velocity of Electromagnetic waves in free space, Flow of energy and Poynting's vector (no derivation)	4 hrs
5	**Superconductivity &Photonics (9hours)**	
5.1	Super conducting Phenomena, Meissner effect and perfect diamagnetism, Types of superconductors-Type I and Type II	2 hrs
5.2	BCS Theory (Qualitative), High temperature superconductors, Applications of super conductivity	2 hrs
5.3	Introduction to photonics-Photonic devices-Light Emitting Diode, Photo detectors -Junction and PIN photodiodes, Solar cells-I-V Characteristics	2 hrs
5.4	Optic fibre-Principle of propagation of light, Types of fibres-Step index and Graded index fibres, Numerical aperture –Derivation, Fibre optic communication system (block diagram), Industrial, Medical and Technological applications of optical fibre, Fibre optic sensors-Intensity Modulated and Phase modulated sensors	3 hrs

NEHRU COLLEGE OF ENGINEERING & RESEARCH CENTRE
THIRUVILWAMALA, THRISSUR-DT

PRINCIPAL
Nehru College of
Engineering and Research Centre
Pampady Thiruvilwamala, Thrissur Dt
Pin 680 597 Kerala

DOWNLOADED FROM KTUASSIST.IN

EST 110	ENGINEERING GRAPHICS	CATEGORY	L	T	P	CREDIT	Year of Introduction
		ESC	2	0	2	3	2019

Preamble: To enable the student to effectively perform technical communication through graphical representation as per global standards.

Prerequisite: NIL

Course Outcomes: After the completion of the course the student will be able to

CO 1	Draw the projection of points and lines located in different quadrants
CO 2	Prepare multiview orthographic projections of objects by visualizing them in different positions
CO 3	Draw sectional views and develop surfaces of a given object
CO 4	Prepare pictorial drawings using the principles of isometric and perspective projections to visualize objects in three dimensions.
CO 5	Convert 3D views to orthographic views and vice versa
CO 6	Obtain multiview projections and solid models of objects using CAD tools

Mapping of course outcomes with program outcomes

	PO 1	PO 2	PO 3	PO 4	PO 5	PO 6	PO 7	PO 8	PO 9	PO 10	PO 11	PO 12
CO 1	3											
CO 2	3											
CO 3	3	1										
CO 4	3									1		
CO 5	3									2		
CO 6	3				3					3		

Assessment Pattern

Bloom's Category	Continuous Assessment Tests		End Semester Examination (100 Marks)
	Test1 (15 Marks)	Test 2 (15 Marks)	
Remember			
Understand	5		20
Apply	10	10	80
Analyse			
Evaluate			
Create			

NEHRU COLLEGE OF ENGINEERING & RESEARCH CENTRE THIRUVILWAMALA, THRISSUR DT.

PRINCIPAL
Nehru College of
Engineering and Research Centre
Pampady, Thiruvilwamala, Thrissur Dt
Pin 680 597 Kerala

DOWNLOADED FROM KTUASSIST.IN

Mark distribution

Total Marks	CIE (Marks)	ESE (Marks)	ESE Duration
150	50	100	3 hours

Continuous Internal Evaluation Pattern:

CIA for section A carries 25 marks (15 marks for 1 test and Class work 10 marks)

CIA for section B carries 15 marks (10 marks for 1 test and Class work 5 marks)

End Semester Examination Pattern:

ESE will be of 3 hour duration on A4 size answer booklet and will be for 100 marks. ESE question paper shall contain two questions from each module of Section A only. Student has to answer any one question from each module. Each question carries 20 marks.

Course Level Assessment Questions

(Questions may be framed based on the outline given under each course outcome)

Course Outcome 1 (CO1):

1. Locate points in different quadrants as per given conditions.
2. Problems on lines inclined to both planes .
3. Find True length, Inclinations and Traces of lines.

Course Outcome 2 (CO2)

1. Draw orthographic views of solids and combination solids
2. Draw views of solids inclined to any one reference plane.
3. Draw views of solids inclined to both reference planes.

Course Outcome 3 (CO3):

1. Draw views of solids sectioned by a cutting plane
2. Find location and inclination of cutting plane given true shape of the section
3. Draw development of lateral surface of solids and also its sectioned views

Course Outcome 4 (CO4):

1. Draw Isometric views/projections of soilds
2. Draw Isometric views/projections of combination of soilds
3. Draw Perspective views of Soilds

Course Outcome 5 (CO5):

1. Draw Orthographic views of solids from the given three dimensional view
2. Draw three dimensional view of the solid from the given orthographic views

NEHRU COLLEGE OF ENGINEERING & RESEARCH CENTRE THIRUVILWAMALA, THRISSUR DT.

DOWNLOADED FROM KTUASSIST.IN

PRINCIPAL
Nehru College of
Engineering and Research Centre
Pampady, Thiruvilwamala, Thrissur Dt
Pin 680 597 Kerala

Course Outcome 6 (CO6):

1. Draw the given figure including dimensions using 2D software
2. Create 3D model using modelling software from the given orthographic views or 3D figure or from real 3D objects

NEHRU COLLEGE OF ENGINEERING & RESEARCH CENTRE
THIRUVILWAMALA, THRISSUR-DT

PRINCIPAL
Nehru College of
Engineering and Research Centre
Pampady, Thiruvilwamala, Thrissur-Dt
Pin - 680 597, Kerala

DOWNLOADED FROM KTUASSIST.IN

Model Question paper

QP CODE: PAGES:3

Reg No:_____

Name :_____

APJ ABDUL KALAM TECHNOLOGICAL UNIVERSITY FIRST SEMESTER B.TECH DEGREE EXAMINATION, MONTH & YEAR

Course Code: EST 110

ENGINEERING GRAPHICS

Max.Marks:100 **Duration: 3 Hours**

PART A

Answer all Questions. Each question carries 3 Marks

Instructions: Retain necessary Construction lines
Show necessary dimensions
Answer any ONE question from each module
Each question carries 20 marks

MODULE I

1. The end point A of a line is 20mm above HP and 10mm in front of VP. The other end of the line is 50mm above HP and 15mm behind VP. The distance between the end projectors is 70mm. Draw the projections of the line. Find the true length and true inclinations of the line with the principal planes. Also locate the traces of the line.
2. One end of a line is 20mm from both the principal planes of projection. The other end of the line is 50mm above HP and 40mm in front of VP. The true length of the line is 70mm. Draw the projections of the line. Find its apparent inclinations, elevation length and plan length. Also locate its traces.

MODULE II

3. A pentagonal pyramid of base side 25mm and height 40mm, is resting on the ground on one of its triangular faces. The base edge of that face is inclined 30° to VP. Draw the projections of the solid.
4. A hexagonal prism has side 25mm and height 50mm has a corner of its base on the ground and the long edge containing that corner inclined at 30° to HP and 45° to VP. Draw the projections of the solid.

MODULE III

5. A triangular prism of base side 40mm and height 70mm is resting with its base on the ground and having an edge of the base perpendicular to VP. Section the solid such that the true shape of

NEHRU COLLEGE OF ENGINEERING & RESEARCH CENTRE THRISSUR

DOWNLOADED FROM KTUASSIST.IN

PRINCIPAL
Nehru College of
Engineering and Research Centre
Pampady Thiruvilwamala, Thrissur
Pin 680 597 Kerala

the section is a trapezium of parallel sides 30mm and 10mm. Draw the projections showing the true shape. Find the inclination of the cutting plane with the ground plane.

6. Draw the development of a pentagonal pyramid of base side 30mm and height 50mm. A string is wound from a corner of the base round the pyramid and back to the same point through the shortest distance. Show the position of the string in the elevation and plan.

MODULE IV

7. The frustum of a cone has base diameter 50mm and top diameter 40mm has a height of 60mm. It is paced centrally on top of a rectangular slab of size 80x60mm and of thickness 20mm. Draw the isometric view of the combination.

8. A hexagonal prism has base side 35mm and height 60mm. A sphere of diameter 40mm is placed centrally on top of it. Draw the isometric projection of the combination.

MODULE V

9. Draw the perspective view of a pentagonal prism, 20mm side and 45mm long lying on one of its rectangular faces on the ground and having its axis perpendicular to picture plane. One of its pentagonal faces touches the picture plane and the station point is 50mm in front of PP, 25mm above the ground plane and lies in a central plane, which is 70mm to the left of the center of the prism.

10. Draw three orthographic views with dimensions of the object shown in figure below.

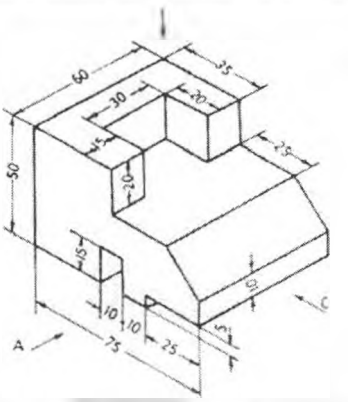

(20X5=100)

NEHRU COLLEGE OF ENGINEERING & RESEARCH CENTRE
THIRUVILWAMALA, THRISSUR DT

PRINCIPAL
Nehru College of
Engineering and Research Centre
Pampady, Thiruvilwamala, Thrissur Dt
Pin 680 597 Kerala

DOWNLOADED FROM KTUASSIST.IN

Time : 3 hours **EST110 ENGINEERING GRAPHICS** **Max. Marks: 100**

SCHEME OF VALUATION

1. Locating the points and drawing the projections of the line – 4 marks
   Finding true length by any one method – 6 marks
   Finding true inclination with VP – 2 marks
   Finding true inclination with HP – 2 marks
   Locating horizontal trace – 2 marks
   Locating vertical trace – 2 marks
   Dimensioning and neatness – 2 marks

   Total = 20 marks

2. Locating the points and drawing true length of the line – 4 marks
   Finding projections by any method – 6 marks
   Finding length of elevation and plan – 2 marks
   Finding apparent inclinations – 2 marks
   Locating horizontal trace – 2 marks
   Locating vertical trace – 2 marks
   Dimensioning and neatness – 2 marks

   Total = 20 marks

3. Drawing initial position plan and elevation – 4 marks
   First inclination views – 4 marks
   Second inclination views -8 marks
   Marking invisible edges – 2 marks
   Dimensioning and neatness – 2 marks

   Total = 20 marks

   (Any one method or combination of methods for solving can be used.
   If initial position is wrong then maximum 50% marks may be allotted for the answer)

4. Drawing initial position plan and elevation – 4 marks
   First inclination views – 4 marks
   Second inclination views -8 marks
   Marking invisible edges – 2 marks
   Dimensioning and neatness – 2 marks

   Total = 20 marks

   (Any one method or combination of methods for solving can be used
   If initial position is wrong then maximum 50% marks may be allotted for the answer)

5. Drawing initial position plan and elevation – 4 marks
   Locating section plane as per given condition – 5 marks
   Drawing true shape -5 marks
   Finding inclination of cutting plane – 2 marks
   Dimensioning and neatness – 2 marks

   Total = 20 marks

6. Drawing initial position plan and elevation – 4 marks

NEHRU COLLEGE OF ENGINEERING & RESEARCH CENTRE
PAMPADY THIRUVILWAMALA THRISSUR-DT.

DOWNLOADED FROM KTUASSIST.IN

PRINCIPAL
Nehru College of
Engineering and Research Centre
Pampady Thiruvilwamala, Thrissur Dt
Pin 680 597 Kerala

Development of the pyramid – 6 marks
Locating string in development -2 marks
Locating string in elevation – 3 marks
Locating string in plan – 3 marks
Dimensioning and neatness – 2 marks

Total = 20 marks

7. Drawing initial positions – 4 marks
   Isometric View of Slab -6 marks
   Isometric View of Frustum – 10 marks
   Dimensioning and neatness – 2 marks

   Total = 20 marks

   (Initial position is optional, hence redistribute if needed.
   Reduce 4 marks if Isometric scale is taken)

8. Drawing initial positions – 4 marks
   Isometric scale – 4 marks
   Isometric projection of prism -5 marks
   Isometric projection of sphere – 5 marks
   Dimensioning and neatness – 2 marks

   Total = 20 marks

   (Initial position is optional, hence redistribute if needed.

9. Drawing the planes and locating the station point – 4 marks
   Locating elevation points – 2 marks
   Locating plan points – 2 marks
   Drawing the perspective view – 10 marks
   Dimensioning and neatness – 2 marks

   Total = 20 marks

10. Drawing the elevation – 8marks
    Drawing the plan – 4 marks
    Drawing the side view – 4 marks
    Marking invisible edges – 2 marks
    Dimensioning and neatness – 2 marks

    Total = 20 marks

NEHRU COLLEGE OF ENGINEERING & RESEARCH CENTRE
THIRUVILWAMALA
THRISSUR-DT

PRINCIPAL
Nehru College of
Engineering and Research Centre
Pampady, Thiruvilwamala, Thrissur Dt
Pin - 680 597, Kerala

DOWNLOADED FROM KTUASSIST.IN

SYLLABUS

General Instructions :

- First angle projection to be followed
- Section A practice problems to be performed on A4 size sheets
- Section B classes to be conducted on CAD lab
- CIA for section A carries 25 marks (15 marks for 1 test and Class work 10 marks)
- CIA for section B carries 15 marks (10 marks for 1 test and Class work 5 marks)

SECTION A

Module 1

Introduction : Relevance of technical drawing in engineering field. Types of lines, Dimensioning, BIS code of practice for technical drawing.

Orthographic projection of Points and Lines: Projection of points in different quadrants, Projection of straight lines inclined to one plane and inclined to both planes. Trace of line. Inclination of lines with reference planes True length of line inclined to both the reference planes.

Module 2

Orthographic projection of Solids: Projection of Simple solids such as Triangular, Rectangle, Square, Pentagonal and Hexagonal Prisms, Pyramids, Cone and Cylinder. Projection of solids in simple position including profile view. Projection of solids with axis inclined to one of the reference planes and with axis inclined to both reference planes.

Module 3

Sections of Solids: Sections of Prisms, Pyramids, Cone, Cylinder with axis in vertical position and cut by different section planes. True shape of the sections. Also locating the section plane when the true shape of the section is given.

Development of Surfaces: Development of surfaces of the above solids and solids cut by different section planes. Also finding the shortest distance between two points on the surface.

Module 4

Isometric Projection: Isometric View and Projections of Prisms, Pyramids, Cone , Cylinder, Frustum of Pyramid, Frustum of Cone, Sphere, Hemisphere and their combinations.

Module 5

Perspective Projection: Perspective projection of Prisms and Pyramids with axis perpendicular to the ground plane, axis perpendicular to picture plane.

Conversion of Pictorial Views: Conversion of pictorial views into orthographic views and vice versa

NEHRU COLLEGE OF ENGINEERING & RESEARCH CENTRE
THRISSUR

PRINCIPAL
Nehru College of
Engineering and Research Centre
Pampady Thiruvilwamala, Thrissur Dt
Pin 680 597 Kerala

DOWNLOADED FROM KTUASSIST.IN

SECTION B

(To be conducted in CAD Lab)

Introduction to Computer Aided Drawing: Role of CAD in design and development of new products, Advantages of CAD. Creating two dimensional drawing with dimensions using suitable software. Conversion of pictorial views into orthographic views. (Minimum 2 exercises mandatory)

Introduction to Solid Modelling: Creating 3D models of various components using suitable modelling software. (Minimum 2 exercises mandatory)

Text Books

1. Bhatt, N.D., Engineering Drawing, Charotar Publishing House Pvt. Ltd.
2. John, K.C. Engineering Graphics, Prentice Hall India Publishers.

Reference Books

1. Agrawal, B. and Agrawal, C.M., Engineering Drawing, Tata McGraw Hill Publishers.
2. Duff, J.M. and Ross, W.A., Engineering Design and Visualisation, Cengage Learning.
3. Kulkarni, D.M., Rastogi, A.P. and Sarkar, A.K., Engineering Graphics with AutoCAD, PHI.
4. Luzaddff, W.J. and Duff, J.M., Fundamentals of Engineering Drawing, PHI.

Course Contents and Lecture Schedule

No	SECTION A	No. of Hours
1	**MODULE I**	
1.1	Introduction to graphics, types of lines, Dimensioning	1
1.2	Concept of principle planes of projection, different quadrants, locating points on different quadrants	2
1.3	Projection of lines, inclined to one plane.Lines inclined to both planes, trapezoid method of solving problems on lines.	2
1.4	Problems on lines using trapezoid method	2
1.5	Line rotation method of solving, problems on line rotation method	2
2	**MODULE II**	
2.1	Introduction of different solids, Simple position plan and elevation of solids	2
2.2	Problems on views of solids inclined to one plane	2
2.3	Problems on views of solids inclined to both planes	2
2.4	Practice problems on solids inclined to both planes	2

NEHRU COLLEGE OF ENGINEERING & RESEARCH CENTRE THIRUVILWAMALA THRISSUR-DT.

DOWNLOADED FROM KTUASSIST.IN

PRINCIPAL
Nehru College of
Engineering and Research Centre
Pampady Thiruvilwamala, Thrissur Dt
Pin 680 597 Kerala

3	**MODULE III**	
3.1	Introduction to section planes. AIP and AVP. Principle of locating cutting points and finding true shape	2
3.2	Problems on sections of different solids	2
3.3	Problems when the true shape is given	2
3.4	Principle of development of solids, sectioned solids	2
4	**MODULE IV**	
4.1	Principle of Isometric View and Projection, Isometric Scale. Problems on simple solids	2
4.2	Isometric problems on Frustum of solids, Sphere and Hemisphere	2
4.3	Problems on combination of different solids	2
5	**MODULE V**	
5.1	Introduction to perspective projection, different planes, station point etc. Perspective problems on pyramids	2
5.2	Perspective problems on prisms	2
5.3	Practice on conversion of pictorial views into orthographic views and vice versa	2
	SECTION B *(To be conducted in CAD lab)*	
1	Introduction to CAD and software. Familiarising features of 2D software. Practice on making 2D drawings	2
2	Practice session on 2D drafting	2
3	Introduction to solid modelling and software	2
4	Practice session on 3D modelling	2

NEHRU COLLEGE OF ENGINEERING & RESEARCH CENTRE
THIRUVILWAMALA
THRISSUR

PRINCIPAL
Nehru College of
Engineering and Research Centre
Pampady, Thiruvilwamala, Thrissur Dt
Pin 680 597 Kerala

DOWNLOADED FROM KTUASSIST.IN

EST 120	BASICS OF CIVIL & MECHANICAL ENGINEERING	CATEGORY	L	T	P	CREDIT	YEAR OF INTRODUCTION
		ESC	4	0	0	4	2019

Preamble:

Objective of this course is to provide an insight and inculcate the essentials of Civil Engineering discipline to the students of all branches of Engineering and to provide the students an illustration of the significance of the Civil Engineering Profession in satisfying the societal needs.

Prerequisite: None

Course Outcomes: After completion of the course, the student will be able to

CO 1	Recall the role of civil engineer in society and to relate the various disciplines of Civil Engineering.
CO 2	Explain different types of buildings, building components, building materials and building construction
CO 3	Describe the importance, objectives and principles of surveying.
CO 4	Summarise the basic infrastructure services MEP, HVAC, elevators, escalators and ramps
CO 5	Discuss the Materials, energy systems, water management and environment for green buildings.
CO 6	Analyse thermodynamic cycles and calculate its efficiency
CO 7	Illustrate the working and features of IC Engines
CO 8	Explain the basic principles of Refrigeration and Air Conditioning
CO 9	Describe the working of hydraulic machines
CO 10	Explain the working of power transmission elements
CO 11	Describe the basic manufacturing, metal joining and machining processes

Mapping of course outcomes with program outcomes

	PO 1	PO 2	PO 3	PO 4	PO 5	PO 6	PO 7	PO 8	PO 9	PO 10	PO 11	PO 12
CO1	3	-	-	-	-	3	2	2	-	-	-	-
CO2	3	2	-	1	3	-	-	3	-	-	-	-
CO3	3	2	-	-	3	-	-	-	2	-	-	-
CO4	3	2	-	-	3	-	-	-	2	-	-	-
CO5	3	2	-	-	3	2	3	-	2	-	-	-

NEHRU COLLEGE OF ENGINEERING & RESEARCH CENTRE
PAMPADY THIRUVILWAMALA THRISSUR-DT

PRINCIPAL
Nehru College of
Engineering and Research Centre
Pampady, Thiruvilwamala, Thrissur Dt
Pin 680 597 Kerala

www.ktuassist.in

DOWNLOADED FROM KTUASSIST.IN

CO6	3	2										
CO7	3	1										
CO8	3	1										
CO9	3	2										
CO10	3	1										
CO11	3											

Assessment Pattern

	Basic Civil Engineering			**Basic Mechanical Engineering**		
Bloom's Category	**Continuous Assessment**		**End Semester Examination (marks)**	**Continuous Assessment**		**End Semester Examination (marks)**
	Test 1 marks	**Test 2 marks**		**Test 1 marks**	**Test 2 marks**	
Remember	5	5	10	7.5	7.5	15
Understand	20	20	40	12.5	12.5	25
Apply				5	5	10
Analyse						
Evaluate						
Create						

Mark distribution

Total Marks	CIE (Marks)	ESE (Marks)	ESE Duration
150	50	100	3 hours

Continuous Internal Evaluation Pattern:

Attendance : 10 marks
Continuous Assessment Test (2 numbers) : 25 marks
Assignment/Quiz/Course project : 15 marks

End Semester Examination Pattern:

There will be two parts; Part I – Basic Civil Engineering and Part II – Basic Mechanical Engineering. Part I and PART II carries 50 marks each. For the end semester examination, part I contain 2 parts - Part A and Part B. Part A contain 5 questions carrying 4 marks each (not exceeding 2 questions from each module). Part B contains 2 questions from each module out of which one to be answered. Each

www.ktuassist.in

NEHRU COLLEGE OF ENGINEERING & RESEARCH CENTRE THRISSUR

DOWNLOADED FROM KTUASSIST.IN

PRINCIPAL
Nehru College of
Engineering and Research Cent
Pampady Thiruvilwamala, Thrissur Di
Pin 680 597 Kerala

question carries 10 mark and can have maximum 2 sub-divisions. The pattern for end semester examination for part II is same as that of part I. **However, student should answer both part I and part 2 in separate answer booklets.**

Course Level Assessment Questions:

Course Outcome CO1: *To recall the role of civil engineer in society and to relate the various disciplines of Civil Engineering.*

1.Explain relevance of Civil engineering in the overall infrastructural development of the country.

Course outcome 2 (CO2) (One question from each module and not more than two)

Explain different types of buildings, building components, building materials and building construction

1. Discuss the difference between plinth area and carpet area.

Course outcome 3 (CO3) (One question from each module and not more than two)

Describe the importance, objectives and principles of surveying.

1. Explain the importance of surveying in Civil Engineering

Course outcome 4 (CO4) (One question from each module and not more than two)

Summarise the basic infrastructure services MEP, HVAC, elevators, escalators and ramps

1. Explain the civil engineering aspects of elevators, escalators and ramps in buildings

Course outcome 5 (CO5) (One question from each module and not more than two)

Discuss the Materials, energy systems, water management and environment for green buildings.

1. Discuss the relevance of Green building in society

Section II *Answer any 1 full question from each module. Each full question carries 10 marks*

Course Outcome 1 (CO1) (Two full question from each module and each question can have maximum 2 sub-divisions)

To recall the role of civil engineer in society and to relate the various disciplines of Civil Engineering

CO Questions

1. a List out the types of building as per occupancy. Explain any two, each in about five sentences.

b. Discuss the components of a building with a neat figure.

2. a. What are the major disciplines of civil engineering and explain their role in the infrastructural framework.

b. Explain the role of NBC, KBR & CRZ norms in building rules and regulations prevailing in our country.

PRINCIPAL
Nehru College of
Engineering and Research Centre
Pampady Thiruvilwamala, Thrissur Dt
Pin 680 597 Kerala

NEHRU COLLEGE OF ENGINEERING & RESEARCH CENTRE THRISSUR

www.ktuassist.in

DOWNLOADED FROM KTUASSIST.IN

Course Outcome 2 (CO2) & Course Outcome 3 (CO3) (Two full question from each module and each question can have maximum 2 sub-divisions)

Explain different types of buildings, building components, building materials and building construction & Describe the importance, objectives and principles of surveying.

CO Questions

1. **a.** What are the different kinds of cement available and what is their use.
   b. List the properties of good building bricks. Explain any five.
2. a. List and explain any five modern construction materials used for construction.
   b. Explain the objectives and principles of surveying

Course outcome 4 (CO4) & Course outcome 5 (CO5) (Two full question from each module and each question can have maximum 2 sub-divisions)

Summarise the basic infrastructure services MEP, HVAC, elevators, escalators and ramps & Discuss the Materials, energy systems, water management and environment for green buildings.

CO Questions

1. **a.** Draw the elevation and plan of one brick thick wall with English bond
   b. Explain the energy systems and water management in Green buildings

2. **a.** Draw neat sketch of the following foundations: (i) Isolated stepped footing; (ii) Cantilever footing; and (iii) Continuous footing.

   b. Discuss the civil engineering aspect of MEP and HVAC in a commercial building

Course Outcome 6 (CO6):

1. 1. In an air standard Otto cycle the compression ratio is 7 and compression begins at 35°C, 0.1 MPa. The maximum temperature of the cycle is 1100°C. Find
   i) Heat supplied per kg of air,
   ii) Work done per kg of air,
   iii) Cycle efficiency
   Take Cp = 1.005 kJ/kgK and Cv=0.718 kJ/kgK
2. A Carnot cycle works with adiabatic compression ratio of 5 and isothermal expansion ratio of 2. The volume of air at the beginning of isothermal expansion is 0.3 m^3. If the maximum temperature and pressure is limited to 550K and 21 bar, determine the minimum temperature in the cycle and efficiency of the cycle.
3. In an ideal diesel cycle, the temperature at the beginning and end of compression is 65°C and 620°C respectively. The temperature at the beginning and end of the expansion is 1850°C and 850 °C. Determine the ideal efficiency of the cycle.
4. Explain the concepts of CRDI and MPFI in IC Engines.

Course Outcome 7 (CO7)

1. With the help of a neat sketch explain the working of a 4 stroke SI engine

NEHRU COLLEGE OF ENGINEERING & RESEARCH CENTRE THIRUVILWAMALA THRISSUR-DT

www.ktuassist.in

DOWNLOADED FROM KTUASSIST.IN

PRINCIPAL
Nehru College of
Engineering and Research Centre
Pampady, Thiruvilwamala, Thrissur Dt

2. Compare the working of 2 stroke and 4 stroke IC engines
3. Explain the classification of IC Engines.

Course Outcome 8(CO8):

1. Explain the working of vapour compression refrigeration system.
2. With the help of suitable sketch explain the working of a split air conditioner.
3. Define: COP, specific humidity, relative humidity and dew point temperature.

Course Outcome 9 (CO9):

1. Explain the working of a single stage centrifugal pump with sketches.
2. With the help of a neat sketch, explain the working of a reciprocating pump.
3. A turbine is to operate under a head of 25 m at 200 rpm. The discharge is 9 m^3/s. If the overall efficiency of the turbine is 90%. Determine the power developed by the turbine.

Course Outcome 10 (CO10):

1. Explain the working of belt drive and gear drive with the help of neat sketches
2. Explain a single plate clutch.
3. Sketch different types of gear trains and explain.

Course Outcome 11 (CO11):

1. Describe the operations which can be performed using drilling machine.
2. Explain the functions of runners and risers used in casting.
3. With a neat sketch, explain the working and parts of a lathe.

NEHRU COLLEGE OF ENGINEERING & RESEARCH CENTRE
THIRUVILWAMALA, THRISSUR-DT

PRINCIPAL
Nehru College of
Engineering and Research Centre
Pampady, Thiruvilwamala, Thrissur Dt
Pin 680 597 Kerala

www.ktuassist.in

DOWNLOADED FROM KTUASSIST.IN

Model Question Paper

QP CODE: EST120 page:3

Reg No:_____

Name:_____

APJ ABDUL KALAM TECHNOLOGICAL UNIVERSITY FIRST SEMESTER B.TECH DEGREE EXAMINATION, MONTH & YEAR

Course Code: EST 120

Course Name: BASICS OF CIVIL AND MECHANICAL ENGINEERING

Max. Marks: 100 Duration: 3 hours

Answer both part I and part 2 in separate answer booklets

PART I: BASIC CIVIL ENGINEERING

PART A

(Answer all questions. Each question carries 4 marks)

1. Explain relevance of Civil engineering in the overall infrastructural development of the country.
2. Discuss the difference between plinth area and carpet area.
3. Explain different types of steel with their properties.
4. What are the different kinds of cement available and what is their use?
5. Define bearing capacity of soil.

(5 x 4 = 20)

Part B

Answer one full question from each module.

MODULE I

6a. List out the types of building as per occupancy. Explain any two, each in about five sentences. (5)

b. Discuss the components of a building with a neat figure. (5)

7a. What are the major disciplines of civil engineering and explain their role in the infrastructural framework. (5)

b. Explain the role of NBC, KBR & CRZ norms in building rules and regulations prevailing in our country. (5)

www.ktuassist.in

DOWNLOADED FROM KTUASSIST.IN

NEHRU COLLEGE OF ENGINEERING & RESEARCH CENTRE THIRUVILWAMALA THRISSUR-DT

PRINCIPAL
Nehru College of
Engineering and Research Centre
Pampady Thiruvilwamala Thrissur Dt
Pin 680 597 Kerala

MODULE II

8a. What are the different kinds of cement available and what is their use. (5)

b. List the properties of good building bricks. Explain any five. (5)

9a. List and explain any five modern construction materials used for construction. (5)

b. Explain the objectives and principles of surveying (5)

MODULE III

10a. Draw the elevation and plan of one brick thick wall with English bond (5)

b. Explain the energy systems and water management in Green buildings (5)

11a. Draw neat sketch of the following foundations: (i) Isolated stepped footing; (ii) Cantilever footing; and (iii) Continuous footing. (5)

b. Discuss the civil engineering aspect of MEP and HVAC in a commercial building (5)

[10 x 3 = 30]

PART II: BASIC MECHANICAL ENGINEERING

PART A

Answer all questions. Each question carries 4 marks

1. Sketch the P-v and T-s diagram of a Carnot cycle and List the processes.
2. Illustrate the working of an epicyclic gear train.
3. Explain cooling and dehumidification processes.
4. Differentiate between soldering and brazing.
5. Explain the principle of Additive manufacturing.

4 x 5 = 20 marks

Part B

Answer one full question from each module.

MODULE I

6. In an air standard Otto cycle the compression ratio is 7 and compression begins at 35°C, 0.1MPa. The maximum temperature of the cycle is 1100°C. Find
   i) Heat supplied per kg of air,
   ii) Work done per kg of air,
   iii)Cycle efficiency

   Take C_p = 1.005 kJ/kgK and C_v=0.718 kJ/kgK

10 marks

OR

NEHRU COLLEGE OF ENGINEERING & RESEARCH CENTRE
PAMPADY THIRUVILWAMALA, THRISSUR DT.

PRINCIPAL
Nehru College of Engineering and Research Centre
Pampady, Thiruvilwamala, Thrissur Dt.
Pin 680 597 Kerala

www.ktuassist.in

DOWNLOADED FROM KTUASSIST.IN

7. a) Explain the working of a 4 stroke SI engine with neat sketches.

7 marks

b) Explain the fuel system of a petrol engine.

3 marks

MODULE II

8. a) Explain the working of a vapour compression system with help of a block diagram.

7 marks

b) Define: Specific humidity, relative humidity and dew point temperature.

3 marks

OR

9. With the help of a neat sketch, explain the working of a centrifugal pump.

10 marks

MODULE III

10. Explain the two high, three high, four high and cluster rolling mills with neat sketches.

10 marks

OR

11. a) Describe the arc welding process with a neat sketch.

6 marks

b) Differentiate between up-milling and down-milling operations. 4 marks

PRINCIPAL
Nehru College of
Engineering and Research Centre
Pampady, Thiruvilwamala, Thrissur Dt
Pin - 680 597 Kerala

NEHRU COLLEGE OF ENGINEERING & RESEARCH CENTRE
PAMPADY
THIRUVILWAMALA
THRISSUR-DT

DOWNLOADED FROM KTUASSIST.IN

SYLLABUS

Module 1

General Introduction to Civil Engineering: Relevance of Civil Engineering in the overall infrastructural development of the country. Responsibility of an engineer in ensuring the safety of built environment. Brief introduction to major disciplines of Civil Engineering like Transportation Engineering, Structural Engineering, Geo-technical Engineering, Water Resources Engineering and Environmental Engineering.

Introduction to buildings: Types of buildings, selection of site for buildings, components of a residential building and their functions.

Building rules and regulations: Relevance of NBC, KBR & CRZ norms (brief discussion only).

Building area: Plinth area, built up area, floor area, carpet area and floor area ratio for a building as per KBR.

Module 2

Surveying: Importance, objectives and principles.

Construction materials, Conventional construction materials: types, properties and uses of building materials: bricks, stones, cement, sand and timber

Cement concrete: - Constituent materials, properties and types. Steel:- Steel sections and steel reinforcements, types and uses.

Modern construction materials:- Architectural glass, ceramics, Plastics, composite materials, thermal and acoustic insulating materials, decorative panels, waterproofing materials. Modern uses of gypsum, pre-fabricated building components (brief discussion only).

Module 3

Building Construction: Foundations: Bearing capacity of soil (definition only), functions of foundations, types – shallow and deep (brief discussion only). Load bearing and framed structures (concept only).

Brick masonry: - Header and stretcher bond, English bond & Flemish bond random rubble masonry.

Roofs and floors: - Functions, types; flooring materials (brief discussion only).

Basic infrastructure services: MEP, HVAC, elevators, escalators and ramps (Civil Engineering aspects only), fire safety for buildings.

Green buildings:- Materials, energy systems, water management and environment for green buildings. (brief discussion only).

Module 4

Analysis of thermodynamic cycles: Carnot, Otto, Diesel cycles, Derivation of efficiency of these cycles, Problems to calculate heat added, heat rejected, net work and efficiency. IC Engines: CI, SI, 2-Stroke, 4-Stroke engines. Listing the parts of different types of IC Engines. Efficiencies of IC Engines(Definitions only), Air, Fuel, cooling and lubricating systems in SI and CI Engines, CRDI, MPFI. Concept of hybrid engines.

Module 5

Refrigeration: Unit of refrigeration, reversed Carnot cycle,COP, vapour compression cycle (only description and no problems); Definitions of dry, wet & dew point temperatures, specific humidity and relative humidity, Cooling and dehumidification, Layout of unit and central air conditioners.

www.ktuassist.in

NEHRU COLLEGE OF ENGINEERING & RESEARCH CENTRE PAMPADY THIRUVILWAMALA, THRISSUR DT

DOWNLOADED FROM KTUASSIST.IN

PRINCIPAL
Nehru College of
Engineering and Research Centre
Pampady Thiruvilwamala, Thrissur Dt
Pin 680 597 Kerala

Description about working with sketches of: Reciprocating pump, Centrifugal pump, Pelton turbine, Francis turbine and Kaplan turbine. Overall efficiency, Problems on calculation of input and output power of pumps and turbines (No velocity triangles)

Description about working with sketches of: Belt and Chain drives, Gear and Gear trains, Single plate clutches.

Module 6

Manufacturing Process: Basic description of the manufacturing processes – Sand Casting, Forging, Rolling, Extrusion and their applications.

Metal Joining Processes: List types of welding, Description with sketches of Arc Welding, Soldering and Brazing and their applications

Basic Machining operations: Turning, Drilling, Milling and Grinding.

Description about working with block diagram of: Lathe, Drilling machine, Milling machine, CNC Machine. Principle of CAD/CAM, Rapid and Additive manufacturing.

Text Books:

1. Dalal, K R, Essentials of Civil Engineering, Charotar Publishing house
2. Mckay, W.B. and Mckay, J. K., Building Construction, Volumes 1 to 4, Pearson India Education Services

References Books:

1. Chen W.F and Liew J Y R (Eds), The Civil Engineering Handbook. II Edition CRC Press (Taylor and Francis)
2. Chudley, R and Greeno R, Building construction handbook, Addison Wesley, Longman group, England
3. Chudley, R, Construction Technology, Vol. I to IV, Longman group, England Course Plan
4. Dalal K R, Essentials of Civil Engineering, Charotar Publishing house.
5. Gopi S, Basic Civil Engineering, Pearson Publishers
6. Kandya A A, Elements of Civil Engineering, Charotar Publishing house
7. Mamlouk, M. S., and Zaniewski, J. P., Materials for Civil and Construction Engineering, Pearson Publishers
8. Mckay, W. B. and Mckay, J. K., Building Construction Volumes 1 to 4, Pearson India Education Services.
9. Rangwala S.C and Dalal K B Building Construction Charotar Publishing house
10. Benjamin,J.,Basic Mechanical Engineering,Pentex Books,9th Edition,2018
11. Balachandran, P.Basic Mechanical Engineering,Owl Books
12. Clifford, M., Simmons, K. and Shipway, P., An Introduction to Mechanical Engineering Part I - CRC Press
13. Roy and Choudhary, Elements of Mechanical Engineering, Media Promoters &Publishers Pvt. Ltd., Mumbai.
14. Sawhney, G. S., Fundamentals of Mechanical Engineering, PHI
15. G Shanmugam, M S Palanichamy, Basic Civil and Mechanical Engineering, McGraw Hill Education; First edition, 2018

NEHRU COLLEGE OF ENGINEERING & RESEARCH CENTRE THRISSUR

PRINCIPAL
Nehru College of Engineering and Research Centre
Pampady, Thiruvilwamala, Thrissur Dt
Pin 680 597 Kerala

www.ktuassist.in

DOWNLOADED FROM KTUASSIST.IN

Course Contents and Lecture Schedule:

No	Topic	Course outcomes addressed	No. of Lectures
1	**Module I**		**Total: 7**
1.1	*General Introduction to Civil Engineering*: Relevance of Civil Engineering in the overall infrastructural development of the country. Responsibility of an engineer in ensuring the safety of built environment.	CO1	1
1.2	Brief introduction to major disciplines of Civil Engineering like Transportation Engineering, Structural Engineering, Geo-technical Engineering, Water Resources Engineering and Environmental Engineering.	CO1	2
1.3	*Introduction to buildings:* Types of buildings, selection of site for buildings, components of a residential building and their functions.	CO2	2
1.4	*Building rules and regulations:* Relevance of NBC, KBR & CRZ norms (brief discussion only)	CO2	1
1.5	*Building area:* Plinth area, built up area, floor area, carpet area and floor area ratio for a building as per KBR.	CO2	1
2	**Module 2**		**Total: 7**
2.1	*Surveying:* Importance, objectives and principles.	CO3	1
2.2	Bricks: - Classification, properties of good bricks, and tests on bricks	CO2	1
2.3	Stones: - *Qualities* of good stones, types of stones and their uses. Cement: - Good qualities of cement, types of cement and their uses.	CO2	1
2.4	Sand: - Classification, qualities of good sand and sieve analysis (basics only). Timber: - Characteristics, properties and uses.	CO2	1
2.5	Cement concrete: - Constituent materials, properties and types, Steel: - Steel sections and steel reinforcements, types and uses.	CO2	1

PRINCIPAL
Nehru College of
Engineering and Research Centre
Pampady, Thiruvilwamala, Thrissur Dt
Pin 680 597 Kerala

www.ktuassist.in

DOWNLOADED FROM KTUASSIST.IN

2.6	Modern construction materials: - Architectural glass, ceramics, plastics, composite materials, thermal and acoustic insulating materials, decorative panels, waterproofing materials, modern uses of gypsum, pre-fabricated building components (brief discussion only)	CO2	2
3	**Module 3**		**Total: 7**
3.1	Foundations: - Bearing capacity of soil (definition only), functions of foundations, types – shallow and deep (brief discussion only). Brick masonry: - Header and stretcher bond, English bond & Flemish bond– elevation and plan (one & one and a half brick wall only). Random rubble masonry.	CO2	2
3.2	Roofs: Functions, types; roofing materials (brief discussion only) Floors: Functions, types; flooring materials (brief discussion only)	CO2	2
3.3	*Basic infrastructure services:* MEP, HVAC, Elevators, escalators and ramps (Civil Engineering aspects only) fire safety for buildings	CO4	2
3.4	*Green buildings:-* Materials, energy systems, water management and environment for green buildings. (brief discussion only)	CO5	1
4	**MODULE 4**		
4.1	Analysis of thermodynamic cycles: Carnot, Otto, and Diesel cycle- Derivation of efficiency of these cycles, Problems to calculate heat added, heat rejected, net work and efficiency	4	
4.2	IC Engines: CI, SI, 2-Stroke, 4-Stroke engines. Listing the parts of different types of IC Engines, efficiencies IC Engines(Description only)	2	
14.3	Air, Fuel, cooling and lubricating systems in SI and CI Engines, CRDI, MPFI. Concept of hybrid engines	2	
5	**MODULE 5**		
5.1	Refrigeration: Unit of refrigeration, reversed Carnot cycle, COP, vapour compression cycle (only description and no problems)	1	
5.2	Definitions of dry, wet & dew point temperatures, specific humidity and relative humidity, Cooling and dehumidification, Layout of unit and central air conditioners.	1	
5.3	Description about working with sketches : Reciprocating pump,	4	

NEHRU COLLEGE OF ENGINEERING & RESEARCH CENTRE
www.ktuassist.in
DOWNLOADED FROM KTUASSIST.IN

PRINCIPAL
Nehru College of
Engineering and Research Centre
Pampady Thiruvilwamala, Thrissur Dt
Pin 680 597 Kerala

	Centrifugal pump, Pelton turbine, Francis turbine and Kaplan turbine. Overall efficiency, Problems on calculation of input and output power of pumps and turbines (No velocity triangles)	
5.4	Description about working with sketches of: Belt and Chain drives, Gear and Gear trains, Single plate clutches	3
6	**MODULE 6**	
6.1	Manufacturing Process: Basic description of the manufacturing processes – Sand Casting, Forging, Rolling, Extrusion and their applications.	2
6.2	Metal Joining Processes :List types of welding, Description with sketches of Arc Welding, Soldering and Brazing, and their applications	1
6.3	Basic Machining operations: Turning, Drilling, Milling and Grinding Description about working with block diagrams of: Lathe, Drilling machine, Milling machine, CNC Machine	3
6.4	Principle of CAD/CAM, Rapid and Additive manufacturing	1

NEHRU COLLEGE OF ENGINEERING & RESEARCH CENTRE
Pampady Thiruvilwamala Thrissur

PRINCIPAL
Nehru College of
Engineering and Research Centre
Pampady, Thiruvilwamala, Thrissur Dt
Pin - 680 597, Kerala

www.ktuassist.in

DOWNLOADED FROM KTUASSIST.IN

EST 130	BASICS OF ELECTRICAL AND ELECTRONICS ENGINEERING	CATEGORY	L	T	P	CREDIT	YEAR OF INTRODUCTION
		ESC	4	0	0	4	2019

Preamble:

This course aims to (1) equip the students with an understanding of the fundamental principles of electrical engineering(2) provide an overview of evolution of electronics, and introduce the working principle and examples of fundamental electronic devices and circuits (3) provide an overview of evolution of communication systems, and introduce the basic concepts in radio communication.

Prerequisite: Physics and Mathematics (Pre-university level)

Course Outcomes: After the completion of the course the student will be able to

CO 1	Apply fundamental concepts and circuit laws to solve simple DC electric circuits
CO 2	Develop and solve models of magnetic circuits
CO 3	Apply the fundamental laws of electrical engineering to solve simple ac circuits in steady state
CO 4	Describe working of a voltage amplifier
CO 5	Outline the principle of an electronic instrumentation system
CO 6	Explain the principle of radio and cellular communication

Mapping of course outcomes with program outcomes

	PO 1	PO 2	PO 3	PO 4	PO 5	PO 6	PO 7	PO 8	PO 9	PO 10	PO 11	PO 12
CO 1	3	1	-	-	-	-	-	-	-	-	-	2
CO 2	3	1	-	-	-	-	-	-	-	-	-	2
CO 3	3	1	-	-	-	-	-	-	-	-	-	2
CO 4	2	-	-	-	-	-	-	-	-	-	-	-
CO 5	2	-	-	-	-	-	-	-	-	-	-	2
CO 6	2	-	-	-	-	-	-	-	-	-	-	2

Assessment Pattern

Bloom's Category	Basic Electrical Engineering			Basic Electronics Engineering		
	Continuous Assessment Tests		End Semester Examination (Marks)	Continuous Assessment Tests		End Semester Examination (Marks)
	Test 1 (Marks)	Test 2 (Marks)		Test 1 (Marks)	Test 2 (Marks)	
Remember	0	0	10	10	10	20
Understand	12.5	12.5	20	15	15	30
Apply	12.5	12.5	20			
Analyse						
Evaluate						
Create						

NEHRU COLLEGE OF ENGINEERING & RESEARCH CENTRE
THIRUVILWAMALA, THRISSUR-DT

PRINCIPAL
Nehru College of
Engineering and Research Centre
Pampady, Thiruvilwamala, Thrissur Dt
Pin 680 597 Kerala

Mark distribution

Total Marks	CIE marks	ESE marks	ESE Duration
150	50	100	3 hours

Continuous Internal Evaluation Pattern:

Attendance : 10 marks
Continuous Assessment Test (2 numbers) : 25 marks
Assignment/Quiz/Course project : 15 marks

End Semester Examination Pattern: There will be two parts; Part I – Basic Electrical Engineering and Part II – Basic Electronics Engineering. Part I and PART II carries 50 marks each. For the end semester examination, part I contain 2 parts - Part A and Part B. Part A contain 5 questions carrying 4 marks each (not exceeding 2 questions from each module). Part B contains 2 questions from each module out of which one to be answered. Each question carries 10 mark and can have maximum 2 sub-divisions. The pattern for end semester examination for part II is same as that of part I. **However, student should answer both part I and part 2 in separate answer booklets.**

Course Level Assessment Questions

Course Outcome 1 (CO1):

1. Solve problems based on current division rule.

2. Solve problems with Mesh/node analysis.

3. Solve problems on Wye-Delta Transformation.

Course Outcome 2 (CO2):

1. Problems on series magnetic circuits

2. Problems on parallel magnetic circuits

3. Problems on composite magnetic ciruits

4. **Course Outcome 3 (CO3):**

1. problems on self inductance, mutual inductance and coefficient of coupling

2. problems on rms and average values of periodic waveforms

3. problems on series ac circuits

4. Compare star and Delta connected 3 phase AC systems.

Course Outcome 4 (CO4): Describe working of a voltage amplifier

1.What is the need of voltage divider biasing in an RC coupled amplifier?

NEHRU COLLEGE OF ENGINEERING & RESEARCH CENTRE
THIRUVILWAMALA, THRISSUR-DT

PRINCIPAL
Nehru College of
Engineering and Research Centre
Pampady Thiruvilwamala Thrissur Dt
Pin 680 597 Kerala

2. Define operating point in the context of a BJT amplifier.

3. Why is it required to have a voltage amplifier in a public address system?

Course Outcome 5 (CO5): Outline the principle of an electronic instrumentation system

1. Draw the block diagram of an electronic instrumentation system.

2. What is a transducer?

3. Explain the working principle of operation of digital multimeter.

Course Outcome 6 (CO6): Explain the principle of radio and cellular communication

1. What is the working principle of an antenna when used in a radio transmitter?

2. What is the need of two separate sections RF section and IF section in a super heterodyne receiver?

3. What is meant by a cell in a cellular communication?

Model Question Paper

QP CODE: Pages: 3

Reg No.:_____

Name:_____

APJ ABDUL KALAM TECHNOLOGICAL UNIVERSITY FIRST SEMESTER B.TECH DEGREE EXAMINATION, MONTH & YEAR

Course Code: EST 130

Course Name: BASICS OF ELECTRICAL AND ELECTRONICS ENGINEERING

Max. Marks: 100 Duration: 3 hours

Answer both part I and part 2 in separate answer booklets

PART I

BASIC ELECTRICAL ENGINEERING

PART A

Answer all questions; each question carries 4 marks.

1. Calculate the current through the 4Ω resistor in the circuit shown, applying current division rule:

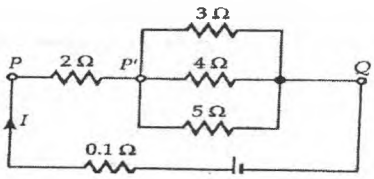

NEHRU COLLEGE OF ENGINEERING & RESEARCH CENTRE
THRISSUR

PRINCIPAL
Nehru College of
Engineering and Research Centre
Pampady, Thiruvilwamala, Thrissur Dt
Pin 680 597 Kerala

2. Calculate the RMS and average values of a purely sinusoidal current having peak value 15A.

3. An alternating voltage of (80+j60)V is applied to an RX circuit and the current flowing through the circuit is (-4+j10)A. Calculate the impedance of the circuit in rectangular and polar forms. Also determine if X is inductive or capacitive.

4. Derive the relation between line and phase values of voltage in a three phase star connected system.

5. Compare electric and magnetic circuits. *(5x4=20)*

PART B

Answer one question from each module; each question carries 10 marks.

Module 1

6. . Calculate the node voltages in the circuit shown, applying node analysis:

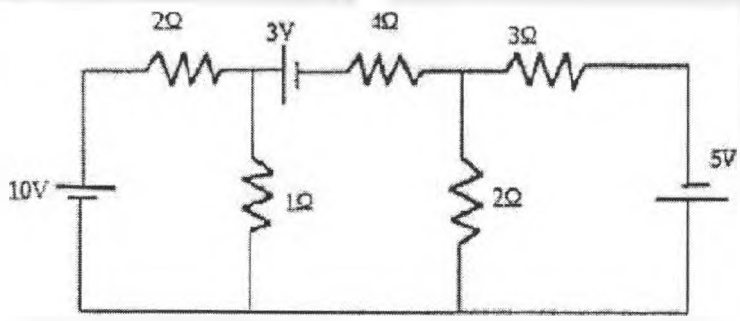

7. (a) State and explain Kirchhoff's laws. (4 marks)

(b) Calculate the current through the galvanometer (G) in the circuit shown:

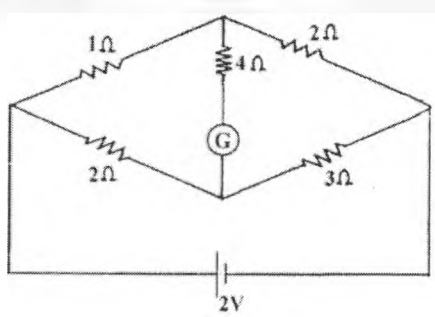

(6 marks)

NEHRU COLLEGE OF ENGINEERING & RESEARCH CENTRE
THIRUVILWAMALA, THRISSUR-DT

PRINCIPAL
Nehru College of
Engineering and Research Centre
Pampady, Thiruvilwamala, Thrissur Dt
Pin- 680 597, Kerala

Module 2

8. (a) State and explain Faraday's laws of electromagnetic induction with examples. (4 marks)

(b) Differentiate between statically and dynamically induced emf. A conductor of length 0.5m moves in a uniform magnetic field of flux density 1.1T at a velocity of 30m/s. Calculate the emf induced in the conductor if the direction of motion of the conductor is inclined at 60^0 to the direction of field. (6 marks)

9. (a) Derive the amplitude factor and form factor of a purely sinusoidal waveform. (5 marks)

(b) A current wave is made up of two components-a 5A dc component and a 50Hz ac component, which is a sinusoidal wave with a peak value of 5A. Sketch the resultant waveform and determine its RMS and average values. (5 marks)

Module 3

10. Draw the power triangle and define active, reactive and apparent powers in ac circuits. Two coils A and B are connected in series across a 240V, 50Hz supply. The resistance of A is 5Ω and the inductance of B is 0.015H. If the input from the supply is 3kW and 2kVAR, find the inductance of A and the resistance of B. Also calculate the voltage across each coil.

11. A balanced three phase load consists of three coils each having resistance of 4Ω and inductance 0.02H. It is connected to a 415V, 50Hz, 3-phase ac supply. Determine the phase voltage, phase current, power factor and active power when the loads are connected in (i) star (ii) delta.

(3x10=30)

PART II

BASIC ELECTRONICS ENGINEERING

PART A

Answer all questions; each question carries 4 marks.

1. Give the specifications of a resistor. The colour bands marked on a resistor are Blue, Grey, Yellow and Gold. What are the minimum and maximum resistance values expected from that resistance?
2. What is meant by avalanche breakdown?
3. Explain the working of a full-wave bridge rectifier.
4. Discuss the role of coupling and bypass capacitors in a single stage RC coupled amplifier.
5. Differentiate AM and FM communication systems.

(5x4=20)

NEHRU COLLEGE OF ENGINEERING & RESEARCH CENTRE
THIRUVILWAMALA, THRISSUR, KERALA

PRINCIPAL
Nehru College of
Engineering and Research

PART B

Answer one question from each module; each question carries 10 marks.

Module 4

6. a) Explain with diagram the principle of operation of an NPN transistor. (5)
   b) Sketch and explain the typical input-output characteristics of a BJT when connected in common emitter configuration. (5)

OR

7. a) Explain the formation of a potential barrier in a P-N junction diode. (5)
   b) What do you understand by Avalanche breakdown? Draw and explain the V-I characteristics of a P-N junction and Zener diode. (5)

Module 5

8. a) With a neat circuit diagram, explain the working of an RC coupled amplifier. (6)
   b) Draw the frequency response characteristics of an RC coupled amplifier and state the reasons for the reduction of gain at lower and higher frequencies. (4)

OR

9. a) With the help of block diagram, explain how an electronic instrumentation system. (6)
   b) Explain the principle of an antenna. (4)

Module 6

10. a) With the help of a block diagram, explain the working of Super hetrodyne receiver. (6)
    b) Explain the importance of antenna in a communication system. (4)

OR

11. a) With neat sketches explain a cellular communication system. (5)
    b) Explain GSM communication with the help of a block diagram. (5)

(3x10=30)

NEHRU COLLEGE OF ENGINEERING & RESEARCH CENTRE

PRINCIPAL
Nehru College of
Engineering and Research Centre
Pampady, Thiruvilwamala, Thrissur Dt
Pin 680 597 Kerala

SYLLABUS

MODULE 1: Elementary Concepts of Electric Circuits

Elementary concepts of DC electric circuits: Basic Terminology including voltage, current, power, resistance, emf; Resistances in series and parallel; Current and Voltage Division Rules; Capacitors & Inductors: V-I relations and energy stored. Ohms Law and Kirchhoff's laws-Problems; Star-delta conversion (resistive networks only-derivation not required)-problems.

Analysis of DC electric circuits: Mesh current method - Matrix representation - Solution of network equations. Node voltage methods-matrix representation-solution of network equations by matrix methods. Numerical problems.

MODULE 2: Elementary Concepts of Magnetic circuits, Electromagnetic Induction and AC fundamentals

Magnetic Circuits: Basic Terminology: MMF, field strength, flux density, reluctance - comparison between electric and magnetic circuits- Series and parallel magnetic circuits with composite materials, numerical problems.

Electromagnetic Induction: Faraday's laws, problems, Lenz's law- statically induced and dynamically induced emfs - Self-inductance and mutual inductance, coefficient of coupling

Alternating Current fundamentals: Generation of alternating voltages-Representation of sinusoidal waveforms: frequency, period, Average, RMS values and form factor of waveforms-Numerical Problems.

MODULE 3: AC Circuits

AC Circuits: Phasor representation of sinusoidal quantities. Trignometric, Rectangular, Polar and complex forms. Analysis of simple AC circuits: Purely resistive, inductive & capacitive circuits; Inductive and capacitive reactance, concept of impedance. Average Power Power factor. Analysis of RL, RC and RLC series circuits-active, reactive and apparent power. Simple numerical problems.

Three phase AC systems: Generation of three phase voltages; advantages of three phase systems, star and delta connections (balanced only), relation between line and phase voltages, line and phase currents- Numerical problems

MODULE 4

Introduction to Semiconductor devices: Evolution of electronics – Vacuum tubes to nano electronics. Resistors, Capacitors and Inductors (constructional features not required): types, specifications. Standard values, color coding. PN Junction diode: Principle of operation, V-I characteristics, principle of avalanche breakdown. Bipolar Junction Transistors: PNP and NPN structures, Principle of operation, relation between current gains in CE, CB and CC, input and output characteristics of common emitter configuration.

NEHRU COLLEGE OF ENGINEERING & RESEARCH CENTRE

PRINCIPAL
Nehru College of
Engineering and Research Centre

MODULE 5

Basic electronic circuits and instrumentation: Rectifiers and power supplies: Block diagram description of a dc power supply, Working of a full wave bridge rectifier, capacitor filter (no analysis), working of simple zener voltage regulator. Amplifiers: Block diagram of Public Address system, Circuit diagram and working of common emitter (RC coupled) amplifier with its frequency response, Concept of voltage divider biasing. Electronic Instrumentation: Block diagram of an electronic instrumentation system.

MODULE 6

Introduction to Communication Systems: Evolution of communication systems – Telegraphy to 5G. Radio communication: principle of AM & FM, frequency bands used for various communication systems, block diagram of super heterodyne receiver, Principle of antenna – radiation from accelerated charge. Mobile communication: basic principles of cellular communications, principle and block diagram of GSM.

Text Books

1. D P Kothari and I J Nagrath, "Basic Electrical Engineering", Tata McGraw Hill, 2010.
2. D C Kulshreshtha, "Basic Electrical Engineering", Tata McGraw Hill, 2010.
3. ChinmoySaha, Arindham Halder and Debarati Ganguly, Basic Electronics - Principles and Applications, Cambridge University Press, 2018.
4. M.S.Sukhija and T.K.Nagsarkar, Basic Electrical and Electronics Engineering, Oxford University Press, 2012.
5. Wayne Tomasi and Neil Storey, A Textbook On Basic Communication and Information Engineering, Pearson, 2010.

Reference Books

1. Del Toro V, "Electrical Engineering Fundamentals", Pearson Education.
2. T. K. Nagsarkar, M. S. Sukhija, "Basic Electrical Engineering", Oxford Higher Education.
3. Hayt W H, Kemmerly J E, and Durbin S M, "Engineering Circuit Analysis", Tata McGraw-Hill
4. Hughes, "Electrical and Electronic Technology", Pearson Education.
5. V. N. Mittle and Arvind Mittal, "Basic Electrical Engineering," Second Edition, McGraw Hill.
6. Parker and Smith, "Problems in Electrical Engineering", CBS Publishers and Distributors.
7. S. B. Lal Seksena and Kaustuv Dasgupta, "Fundamentals of Electrical Engineering", Cambridge University Press.
8. Anant Agarwal, Jeffrey Lang, Foundations of Analog and Digital Electronic Circuits, Morgan Kaufmann Publishers, 2005.
9. Bernard Grob, Ba sic Electronics, McGraw Hill.
10. A. Bruce Carlson, Paul B. Crilly, Communication Systems: An Introduction to Signals and Noise in Electrical Communication, Tata McGraw Hill, 5th Edition.

PRINCIPAL
Nehru College of
Engineering and Research Centre
Pampady, Thiruvilwamala, Thrissur Dt

COURSE CONTENTS AND LECTURE SCHEDULE

No	Topic	No. of Lectures
1	*Elementary Concepts of Electric Circuits*	
1.1	**Elementary concepts of DC electric circuits:** Basic Terminology including voltage, current, power, resistance, emf; Resistances in series and parallel; Current and Voltage Division Rules; Capacitors & Inductors: V-I relations and energy stored. Ohms Law and Kirchhoff's laws-Problems; Star-delta conversion (resistive networks only-derivation not required)-problems.	 1 2 1
1.2	**Analysis of DC electric circuits:** Mesh current method - Matrix representation - Solution of network equations. Node voltage methods-matrix representation-solution of network equations by matrix methods. Numerical problems.	1 1 2
2	Elementary Concepts of Magnetic circuits, Electromagnetic Induction and AC fundamentals	
2.1	**Magnetic Circuits:** Basic Terminology: MMF, field strength, flux density, reluctance - comparison between electric and magnetic circuits- Series and parallel magnetic circuits with composite materials, numerical problems.	 1 2
2.2	**Electromagnetic Induction:** Faraday's laws, problems, Lenz's law-statically induced and dynamically induced emfs - Self-inductance and mutual inductance, coefficient of coupling	1 2
2.3	**Alternating Current fundamentals:** Generation of alternating voltages-Representation of sinusoidal waveforms: frequency, period, Average, RMS values and form factor of waveforms-Numerical Problems.	2
3	AC Circuits	

NEHRU COLLEGE OF ENGINEERING & RESEARCH CENTRE THIRUVILWAMALA, THRISSUR DT.

PRINCIPAL
Nehru College of
Engineering and Research Centre
Pampady, Thiruvilwamala, Thrissur Dt
Pin - 680 597, Kerala

3.1	**AC Circuits:** Phasor representation of sinusoidal quantities. Trigonometric, Rectangular, Polar and complex forms. Analysis of simple AC circuits: Purely resistive, inductive & capacitive circuits; Inductive and capacitive reactance, concept of impedance. Average Power, Power factor. Analysis of RL, RC and RLC series circuits-active, reactive and apparent power. Simple numerical problems.	1 2 1 2
3.2	**Three phase AC systems:** Generation of three phase voltages; advantages of three phase systems, star and delta connections (balanced only), relation between line and phase voltages, line and phase currents- Numerical problems.	2
4	**Introduction to Semiconductor devices**	
4.1	Evolution of electronics – Vacuum tubes to nano electronics (In evolutional perspective only)	1
4.2	Resistors, Capacitors and Inductors: types, specifications. Standard values, color coding (No constructional features)	2
4.3	**PN Junction diode:** Principle of operation, V-I characteristics, principle of avalanche breakdown	2
4.4	**Bipolar Junction Transistors:** PNP and NPN structures, Principle of operation, relation between current gains in CE, CB and CC, input and output characteristics of common emitter configuration	3
5	**Basic electronic circuits and instrumentation**	
5.1	**Rectifiers and power supplies:** Block diagram description of a dc power supply, Working of a full wave bridge rectifier, capacitor filter (no analysis), working of simple zener voltage regulator	3
5.2	**Amplifiers:** Block diagram of Public Address system, Circuit diagram and working of common emitter (RC coupled) amplifier with its frequency response, Concept of voltage divider biasing	4
5.3	**Electronic Instrumentation:** Block diagram of an electronic instrumentation system	2
6	**Introduction to Communication Systems**	
6.1	Evolution of communication systems – Telegraphy to 5G	1

NEHRU COLLEGE OF ENGINEERING & RESEARCH CENTRE

PRINCIPAL
Nehru College of
Engineering and Research Centre
Pampady Thiruvilwamala, Thrissur Dt
Pin - 680 597, Kerala

6.2	**Radio communication:** principle of AM & FM, frequency bands used for various communication systems, block diagram of super heterodyne receiver, Principle of antenna – radiation from accelerated charge	4
6.3	**Mobile communication:** basic principles of cellular communications, principle and block diagram of GSM.	2

Suggested Simulation Assignments for Basic Electronics Engineering

1. Plot V-I characteristics of Si and Ge diodes on a simulator
2. Plot Input and Output characteristics of BJT on a simulator
3. Implementation of half wave and full wave rectifiers
4. Simulation of RC coupled amplifier with the design supplied
5. Generation of AM signal

Note: The simulations can be done on open tools such as QUCS, KiCad, GNURadio or similar software to augment the understanding.

NEHRU COLLEGE OF ENGINEERING & RESEARCH CENTRE THRISSUR

PRINCIPAL
Nehru College of
Engineering and Research Centre
Kilathur, Thiruvilwamala, Thrissur Dt
Pin - 680 597, Kerala

EST 102	PROGRAMING IN C	CATEGORY	L	T	P	CREDIT	YEAR OF INTRODUCTION
		ESC	2	1	2	4	2019

Preamble: The syllabus is prepared with the view of preparing the Engineering Graduates capable of writing readable C programs to solve computational problems that they may have to solve in their professional life. The course content is decided to cover the essential programming fundamentals which can be taught within the given slots in the curriculum. This course has got 2 Hours per week for practicing programming in C. A list showing 24 mandatory programming problems are given at the end. The instructor is supposed to give homework/assignments to write the listed programs in the rough record as and when the required theory part is covered in the class. The students are expected to come prepared with the required program written in the rough record for the lab classes.

Prerequisite: NIL

Course Outcomes: After the completion of the course the student will be able to

CO 1	Analyze a computational problem and develop an algorithm/flowchart to find its solution
CO 2	Develop readable* C programs with branching and looping statements, which uses Arithmetic, Logical, Relational or Bitwise operators.
CO 3	Write readable C programs with arrays, structure or union for storing the the data to be processed
CO 4	Divide a given computational problem into a number of modules and develop a readable multi-function C program by using recursion if required, to find the solution to the computational problem
CO 5	Write readable C programs which use pointers for array processing and parameter passing
CO 6	Develop readable C programs with files for reading input and storing output

readable* - readability of a program means the following:

1. Logic used is easy to follow
2. Standards to be followed for indentation and formatting
3. Meaningful names are given to variables
4. Concise comments are provided wherever needed

NEHRU COLLEGE OF ENGINEERING RESEARCH CENTRE THIRUVILWAMALA THRISSUR-DT

PRINCIPAL
Nehru College of
Engineering and Research Centre
Pampady, Thiruvilwamala
Pin - 680

DOWNLOADED FROM KTUASSIST.IN

Mapping of course outcomes with program outcomes

	PO1	PO2	PO3	PO4	PO5	PO6	PO7	PO8	PO9	PO10	PO11	PO12
CO1	✓	✓	✓	✓		✓				✓	✓	✓
CO2	✓	✓	✓	✓	✓					✓		✓
CO3	✓	✓	✓	✓	✓					✓		✓
CO4	✓	✓	✓	✓	✓					✓	✓	✓
CO5	✓	✓			✓					✓		✓
CO6	✓	✓			✓					✓		✓

Assessment Pattern

Bloom's Category	Continuous Assessment Tests		End Semester Examination Marks
	Test 1 (Marks)	Test 2 (Marks)	
Remember	15	10	25
Understand	10	15	25
Apply	20	20	40
Analyse	5	5	10
Evaluate			
Create			

Mark distribution

Total Marks	CIE Marks	ESE Marks	ESE Duration
150	50	100	3 hours

PRINCIPAL
Nehru College of
Engineering and Research Centre
Pampady Dt
Pin 680 597 Kera

NEHRU COLLEGE OF ENGINEERING & RESEARCH CENTRE

DOWNLOADED FROM KTUASSIST.IN

Continuous Internal Evaluation Pattern:

Attendance	: 10 marks
Continuous Assessment Test 1 (for theory, for 2 hrs)	: 20 marks
Continuous Assessment Test 2 (for lab, internal examination, for 2 hrs)	: 20 marks

Internal Examination Pattern: There will be two parts; Part A and Part B. Part A contains 5 questions with 2 questions from each module (2.5 modules x 2 = 5), having 3 marks for each question. Students should answer all questions. Part B also contains 5 questions with 2 questions from each module (2.5 modules x 2 = 5), of which a student should answer any one. A question should not have sub-divisions and each one carries 7 marks.

End Semester Examination Pattern: There will be two parts; Part A and Part B. Part A contains 10 questions with 2 questions from each module, having 3 marks for each question. Students should answer all questions. Part B contains 2 questions from each module of which a student should answer any one. Each question can have maximum 2 sub-divisions and carry 14 marks.

Sample Course Level Assessment Questions

Course Outcome 1 (CO1): Write an algorithm to check whether largest of 3 natural numbers is prime or not. Also, draw a flowchart for solving the same problem.

Course Outcome 2 (CO2): Write an easy to read C program to process a set of n natural numbers and to find the largest even number and smallest odd number from the given set of numbers. The program should not use division and modulus operators.

Course Outcome 3(CO3): Write an easy to read C program to process the marks obtained by n students of a class and prepare their rank list based on the sum of the marks obtained. There are 3 subjects for which examinations are conducted and the third subject is an elective where a student is allowed to take any one of the two courses offered.

Course Outcome 4 (CO4): Write an easy to read C program to find the value of a mathematical function f which is defined as follows. f(n) = n! / (sum of factors of n), if n is not prime and f(n) = n! / (sum of digits of n), if n is prime.

Course Outcome 5 (CO5): Write an easy to read C program to sort a set of n integers and to find the number of unique numbers and the number of repeated numbers in the given set of numbers. Use a function which takes an integer array of n elements, sorts the array using the Bubble Sorting Technique and returns the number of unique numbers and the number of repeated numbers in the given array.

Course Outcome 6 (CO6): Write an easy to read C program to process a text file and to print the Palindrome words into an output file.

NEHRU COLLEGE OF ENGINEERING & RESEARCH CENTRE
LIBRARY
THIRUVILWAMALA, THRISSUR-DT

PRINCIPAL
Nehru College of
Engineering and Research Centre
Pampady Thiruvilwamala, Thrissur Dt
Pin 680 597 Kerala

DOWNLOADED FROM KTUASSIST.IN

Model Question paper

QP CODE: PAGES:3

Reg No:_____

Name :_____

APJ ABDUL KALAM TECHNOLOGICAL UNIVERSITY FIRST SEMESTER B.TECH DEGREE EXAMINATION, MONTH & YEAR

***Course Code:* EST 102**

Course Name: Programming in C (Common to all programs)

Max.Marks:100 **Duration: 3 Hours**

PART A

Answer all Questions. Each question carries 3 Marks

Part A

(*Answer all questions. Each question carries 3 marks*)

1. Write short note on processor and memory in a computer.
2. What are the differences between compiled and interpreted languages? Give example for each.
3. Write a C program to read a Natural Number through keyboard and to display the reverse of the given number. For example, if "3214567" is given as input, the output to be shown is "7654123".
4. Is it advisable to use *goto* statements in a C program? Justify your answer.
5. Explain the different ways in which you can *declare & initialize* a single dimensional array.
6. Write a C program to read a sentence through keyboard and to display the count of white spaces in the given sentence.
7. What are the advantages of using functions in a program?
8. With a simple example program, explain *scope* and *life time* of variables in C.
9. Write a function in C which takes the address of a single dimensional array (containing a finite sequence of numbers) and the number of numbers stored in the array as arguments and stores the numbers in the same array in reverse order. Use pointers to access the elements of the array.
10. With an example, explain the different modes of opening a file. (10x3=30)

NEHRU COLLEGE OF ENGINEERING & RESEARCH CENTRE THIRUVILWAMALA THRISSUR-DT

DOWNLOADED FROM KTUASSIST.IN

PRINCIPAL
Nehru College of
Engineering and Research Centre
Pampady, Thiruvilwamala, Thrissur Dt
Pin 680 597 Kerala

Part B

11.

(a) Draw a flow chart to find the position of an element ina given sequence, using linear searching technique. With an example explain how the flowchart finds the position of a given element. **(10)**

(b) Writea pseudo code representing the flowchart for linear searching. **(4)**

OR

12.

(a) With the help of a flow chart, explain the bubble sort operation. Illustrate with an example. **(10)**

(b) Write an algorithm representing the flowchart for bubble sort. **(4)**

13.

(a) Write a C program to read an English Alphabet through keyboard and display whether the given Alphabet is in upper case or lower case. **(6)**

(b) Explain how one can use the builtin function in C, *scanf*to read values of different data types. Also explain using examples how one can use the builtin function in C, *printf*for text formatting. **(8)**

OR

14.

(a) With suitable examples, explain various operators in C. **(10)**

(b) Explain how characters are stored and processed in C. **(4)**

15.

(a) Write a function in C which takes a 2-Dimensional array storing a matrix of numbers and the order of the matrix (number of rows and columns) as arguments and displays the sum of the elements stored in each row. **(6)**

(b) Write a C program to check whether a given matrix is a diagonal matrix. **(8)**

OR

16.

(a) Without using any builtin string processing function like *strlen*, *strcat* etc., write a program to concatenate two strings. **(8)**

(b) Write a C program to perform bubble sort. **(6)**

NEHRU COLLEGE OF ENGINEERING & RESEARCH CENTRE
THIRUVILWAMALA THRISSUR

DOWNLOADED FROM KTUASSIST.IN

PRINCIPAL
Nehru College of
Engineering and Research Centre
Pampady, Thiruvilwamala, Thrissur Dt
Pin - 680 597

17.

(a) Write a function namely *myFact* in C to find the factorial of a given number. Also, write another function in C namely*nCr* which accepts two positive integer parameters *n* and *r* and returns the value of the mathematical function*C(n,r)*(n! / (r! x (n - r)!)). The function *nCr* is expected to make use of the factorial function *myFact.* **(10)**

(b) What is recursion? Give an example. **(4)**

OR

18.

(a) With a suitable example, explain the differences between a structure and a union in C. **(6)**

(b) Declare a structure namely *Student* to store the details (*roll number, name, mark_for_C*) of a student. Then, write a program in C to find the average mark obtained by the students in a class for the subject *Programming in C* (using the field *mark_for_C*). Use array of structures to store the required data **(8)**

19.

(a) With a suitable example, explain the concept of pass by reference. **(6)**

(b) With a suitable example, explain how pointers can help in changing the content of a single dimensionally array passed as an argument to a function in C. **(8)**

OR

20.

(a) Differentiate between sequential files and random access files? **(4)**

(b) Using the prototypes explain the functionality provided by the following functions. **(10)**

i. rewind()

ii. fseek()

iii. ftell()

iv. fread()

v. fwrite() ***(14X5=70)***

NEHRU COLLEGE OF ENGINEERING & RESEARCH CENTRE
THIRUVILWAMALA, THRISSUR

PRINCIPAL
Nehru College of
Engineering and Research Centre
Pampady Thiruvilwamala Thrissur Dt
Pin 680 597 Kerala

DOWNLOADED FROM KTUASSIST.IN

SYLLABUS

Programming in C (Common to all disciplines)

Module 1

Basics of Computer Hardware and Software

Basics of Computer Architecture: processor, Memory, Input& Output devices

Application Software & System software: Compilers, interpreters, High level and low level languages

Introduction to structured approach to programming, Flow chart Algorithms, Pseudo code (*bubble sort, linear search - algorithms and pseudocode*)

Module 2

Program Basics

Basic structure of C program: Character set, Tokens, Identifiers in C, Variables and Data Types , Constants, Console IO Operations, printf and scanf

Operators and Expressions: Expressions and Arithmetic Operators, Relational and Logical Operators, Conditional operator, size of operator, Assignment operators and Bitwise Operators. Operators Precedence

Control Flow Statements: If Statement, Switch Statement, Unconditional Branching using goto statement, While Loop, Do While Loop, For Loop, Break and Continue statements.(Simple programs covering control flow)

Module 3

Arrays and strings

Arrays Declaration and Initialization, 1-Dimensional Array, 2-Dimensional Array

String processing: In built String handling functions (strlen, strcpy, strcat and strcmp, puts, gets) Linear search program, bubble sort program, simple programs covering arrays and strings

Module 4

Working with functions

Introduction to modular programming, writing functions, formal parameters, actual parameters Pass by Value, Recursion, Arrays as Function Parameters structure, union, Storage Classes, Scope and life time of variables, *simple programs using functions*

Module 5

Pointers and Files

Basics of Pointer: declaring pointers, accessing data though pointers, NULL pointer,array access using pointers, pass by reference effect

File Operations: open, close, read, write, append

Sequential access and random access to files: In built file handlingfunctions (*rewind() ,fseek(), ftell(), feof(), fread(), fwrite()), simple programs covering pointers and files.*

Text Books

1. Schaum Series, Gottfried B.S.,Tata McGraw Hill,Programming with C
2. E. Balagurusamy, Mcgraw Hill,Programming in ANSI C
3. Asok N Kamthane, Pearson,Programming in C
4. Anita Goel, Pearsc

NEHRU COLLEGE OF ENGINEERING & RESEARCH CENTRE
Pampady
Thiruvilwamala
THRISSUR-680

PRINCIPAL
Nehru College of
Engineering and Research Centre
Pampady
Thiruvilwamala
Thrissur, Kerala

DOWNLOADED FROM KTUASSIST.IN

Reference Books

1. Anita Goel and Ajay Mittal, Pearson, Computer fundamentals and Programming in C
2. Brian W. Kernighan and Dennis M. Ritchie, Pearson, C Programming Language
3. Rajaraman V, PHI, Computer Basics and Programming in C
4. Yashavant P, Kanetkar, BPB Publications, Let us C

Course Contents and Lecture Schedule

Module 1: Basics of Computer Hardware and Software		**(7 hours)**
1.1	**Basics of Computer Architecture:**Processor, Memory, Input& Output devices	**2 hours**
1.2	**Application Software & System software:**Compilers, interpreters,High level and low level languages	**2 hours**
1.3	Introduction to structured approach to programming, Flow chart	**1 hours**
1.4	Algorithms, Pseudo code (*bubble sort, linear search - algorithms and pseudocode*)	**2 hours**
Module 2: Program Basics		**(8 hours)**
2.1	**Basic structure of C program:** Character set,Tokens, Identifiers in C, Variables and Data Types , Constants, Console IO Operations,printf and scanf	**2 hours**
2.2	**Operators and Expressions:**Expressions and Arithmetic Operators, Relational and Logical Operators,Conditional operator, sizeof operator, Assignment operators and Bitwise Operators. Operators Precedence	**2 hours**
2.3	**Control Flow Statements:** If Statement, Switch Statement, Unconditional Branching using goto statement, While Loop,Do While Loop,For Loop, Break and Continue statements.*(Simple programs covering control flow)*	**4 hours**
Module 3: Arrays and strings:		**(6 hours)**
3.1	Arrays Declaration and Initialization, 1-Dimensional Array, 2-Dimensional Array	**2 hours**

NEHRU COLLEGE OF ENGINEERING & RESEARCH CENTRE THRISSUR

DOWNLOADED FROM KTUASSIST.IN

PRINCIPAL
Nehru College of
Engineering and Research Centre
Campus, Thiruvilvamala, Thrissur Dt
Pin 680 597 Kerala

3.2	**String processing:** In built String handlingfunctions(*strlen, strcpy, strcat and strcmp, puts, gets*)	**2 hours**
3.3	Linear search program, bubble sort program,*simple programs covering arrays and strings*	**3 hours**
Module 4: Working with functions		**(7 hours)**
4.1	Introduction to modular programming, writing functions, formal parameters, actual parameters	**2 hours**
4.2	Pass by Value, Recursion, Arrays as Function Parameters	**2 hours**
4.3	structure, union, Storage Classes,Scope and life time of variables, *simple programs using functions*	**3 hours**
Module 5: Pointers and Files		**(7 hours)**
5.1	**Basics of Pointer**: declaring pointers, accessing data though pointers, NULL pointer,array access using pointers, pass by reference effect	**3 hours**
5.2	**File Operations**: open, close, read, write, append	**1 hours**
5.3	**Sequential access and random access to files:** In built file handlingfunctions (*rewind() ,fseek(), ftell(), feof(), fread(), fwrite()*), *simple programs covering pointers and files.*	**2 hours**

C PROGRAMMING LAB (Practical part of EST 102, Programming in C)

Assessment Method: The Academic Assessment for the Programming lab should be done internally by the College. The assessment shall be made on 50 marks and the mark is divided as follows: Practical Records/Outputs - 20 marks (internal by the College), Regular Lab Viva - 5 marks (internal by the College), Final Practical Exam – 25 marks (internal by the College).

LIST OF LAB EXPERIMENTS

1.Familiarization of Hardware Components of a Computer

2. Familiarization of Linux environment – How to do Programming in C with Linux

3.Familiarization of console I/O and operators in C

i) Display "Hello World"

ii) Read two numbers, add them and display theirsum

iii) Read the radius of a circle, calculate its area and display it

DOWNLOADED FROM KTUASSIST.IN

PRINCIPAL

iv)Evaluate the arithmetic expression ((a -b / c * d + e) * (f +g)) and display its solution.Read the values of the variables from the user through console.

1. Read 3 integer values and find the largest amoung them.

2.Read a Natural Number and check whether the number is prime or not

3.Read a Natural Number and check whether the number is Armstrong or not

4.Read n integers, store them in an array and find their sum and average

5.Read n integers, store them in an array and search for an element in the array using an algorithm for Linear Search

6.Read n integers, store them in an array and sort the elements in the array using Bubble Sort algorithm

7.Read a string (word), store it in an array and check whether it is a palindrome word or not.

8.Read two strings (each one ending with a $ symbol), store them in arrays and concatenate them without using library functions.

9.Read a string (ending with a $ symbol), store it in an array and count the number of vowels, consonants and spaces in it.

10. Read two input each representing the distances between two points in the Euclidean space, store these in structure variables and add the two distance values.

11. Using structure, read and print data of n employees (*Name, Employee Id and Salary*)

12. Declare a union containing 5 string variables (*Name, House Name, City Name, State and Pin code*) each with a length of C_SIZE (user defined constant). Then, read and display the address of a person using a variable of the union.

13. Find the factorial of a given Natural Number n usingrecursive and non recursive functions

14. Read a string (word), store it in an array and obtain its reverse by using a user defined function.

15. Write a menu driven program for performing matrix addition, multiplication and finding the transpose. Use functions to (i) read a matrix, (ii) find the sum of two matrices, (iii) find the product of two matrices, (i) find the transpose of a matrix and (v) display a matrix.

16. Do the following using pointers

i) add two numbers

ii) swap two numbers using a user defined function

17. Input and Print the elements of an array using pointers

18. Compute sum of the elements stored in an array using pointers and user defined function.

19. Create a file and perform the following

iii) Write data to the file

iv) Read the data in a given file & display the file content on console

v) append new data and display on console

20. Open a text input file and count number of characters, words and lines in it; and store the results in an output file.

NEHRU COLLEGE OF ENGINEERING & RESEARCH CENTRE
PIN-680 597
THIRUVILWAMALA,
THRISSUR DT

PRINCIPAL
Nehru College of
Engineering and Research Centre
Panipady, Thiruvilwamala, Thrissur Dt
Pin 680 597 Kerala

DOWNLOADED FROM KTUASSIST.IN

Course code	Course Name	L-T-P-Credits	Year of Introduction
CS205	Data Structures	3-1-0-4	2016

Pre-requisite: B101-05 Introduction to Computing and Problem Solving

Course Objectives

1. To impart a thorough understanding of linear data structures such as stacks, queues and their applications.
2. To impart a thorough understanding of non-linear data structures such as trees, graphs and their applications.
3. To impart familiarity with various sorting, searching and hashing techniques and their performance comparison.
4. To impart a basic understanding of memory management.

Syllabus

Introduction to various programming methodologies, terminologies and basics of algorithms analysis, Basic Abstract and Concrete Linear Data Structures, Non-linear Data Structures, Memory Management, Sorting Algorithms, Searching Algorithms, Hashing.

Expected Outcome:

Students will be able to

1. compare different programming methodologies and define asymptotic notations to analyze performance of algorithms.
2. use appropriate data structures like arrays, linked list, stacks and queues to solve real world problems efficiently.
3. represent and manipulate data using nonlinear data structures like trees and graphs to design algorithms for various applications.
4. illustrate and compare various techniques for searching and sorting.
5. appreciate different memory management techniques and their significance.
6. illustrate various hashing techniques.

Text Books:

1. Samanta D., Classic Data Structures, Prentice Hall India, 2/e, 2009.
2. Richard F. Gilberg, Behrouz A. Forouzan, Data Structures: A Pseudocode Approach with C, 2/e, Cengage Learning, 2005.

References

1. Horwitz E., S. Sahni and S. Anderson, Fundamentals of Data Structures in C, University Press (India), 2008.
2. Aho A. V., J. E. Hopcroft and J. D. Ullman, Data Structures and Algorithms, Pearson Publication,1983.
3. Tremblay J. P. and P. G. Sorenson, Introduction to Data Structures with Applications, Tata McGraw Hill, 1995.
4. Peter Brass, Advanced Data Structures, Cambridge University Press, 2008
5. Lipschuts S., Theory and Problems of Data Structures, Schaum's Series, 1986.
6. Wirth N., Algorithms + Data Structures = Programs, Prentice Hall, 2004.
7. Hugges J. K. and J. I. Michtm, A Structured Approach to Programming, PHI, 1987
8. Martin Barrett, Clifford Wagner, And Unix: Tools For Software Design, John Wiley, 2008 reprint.

NEHRU COLLEGE OF ENGINEERING & RESEARCH CENTRE
PAMPADY THIRUVILWAMALA THRISSUR

PRINCIPAL
Nehru College of
Engineering and Research Centre
Pampady, Thiruvilwamala, Thrissur Dt
Pin - 680 597, Kerala

COURSE PLAN			
Module	**Contents**	**Hours (56)**	**Sem. Exam Marks**
I	Introduction to programming methodologies – structured approach, stepwise refinement techniques, programming style, documentation – analysis of algorithms: frequency count, definition of Big O notation, asymptotic analysis of simple algorithms. Recursive and iterative algorithms.	**9**	**15%**
II	Abstract and Concrete Data Structures- Basic data structures – vectors and arrays. Applications, Linked lists:- singly linked list, doubly linked list, Circular linked list, operations on linked list, linked list with header nodes, applications of linked list: polynomials,.	**9**	**15%**
III	Applications of linked list (continued): Memory management, memory allocation and de-allocation. First-fit, best-fit and worst-fit allocation schemes Implementation of Stacks and Queues using arrays and linked list, DEQUEUE (double ended queue). Multiple Stacks and Queues, Applications.	**9**	**15%**
IV	String: - representation of strings, concatenation, substring searching and deletion. Trees: - m-ary Tree, Binary Trees – level and height of the tree, complete-binary tree representation using array, tree traversals (Recursive and non-recursive), applications. Binary search tree – creation, insertion and deletion and search operations, applications.	**10**	**15%**
V	Graphs – representation of graphs, BFS and DFS (analysis not required) applications. Sorting techniques – *Bubble sort, Selection Sort,* Insertion sort, Merge sort, Quick sort, Heaps and Heap sort. Searching algorithms (Performance comparison expected. Detailed analysis not required)	**09**	**20%**
VI	Linear and Binary search. (Performance comparison expected. Detailed analysis not required) Hash Tables – Hashing functions – Mid square, division, folding, digit analysis, collusion resolution and Overflow handling techniques.	**10**	**20%**

NEHRU COLLEGE OF ENGINEERING & RESEARCH CENTRE THIRUVILWAMALA, THRISSUR-DT

PRINCIPAL
Nehru College of
Engineering and Research Centre
Pampady, Thiruvilwamala, Thrissur Dt
Pin - 680 597, Kerala

Question Paper Pattern:

1. There will be *five* parts in the question paper – A, B, C, D, E
2. Part A
   a. Total marks : 12
   b. *Four* questions each having *3* marks, uniformly covering module I and II; All *four* questions have to be answered.
3. Part B
   a. Total marks : 18
   b. *Three* questions each having *9* marks, uniformly covering module I and II; T*wo* questions have to be answered. Each question can have a maximum of three subparts
4. Part C
   a. Total marks : 12
   b. *Four* questions each having *3* marks, uniformly covering module III and IV; All *four* questions have to be answered.
5. Part D
   a. Total marks : 18
   b. *Three* questions each having *9* marks, uniformly covering module III and IV; T*wo* questions have to be answered. Each question can have a maximum of three subparts
6. Part E
   a. Total Marks: 40
   b. *Six* questions each carrying 10 marks, uniformly covering modules V and VI; *four* questions have to be answered.
   c. A question can have a maximum of three sub-parts.
7. There should be at least 60% analytical/numerical/design questions.

NEHRU COLLEGE OF ENGINEERING & RESEARCH CENTRE
THIRUVILWAMALA, THRISSUR-DT

PRINCIPAL
Nehru College of
Engineering and Research Centre
Pampady, Thiruvilwamala, Thrissur Dt
Pin - 680 597, Kerala

Course code	Course Name	L-T-P -Credits	Year of Introduction
CS207	ELECTRONIC DEVICES & CIRCUITS	3-0-0-3	2016

Pre-requisite: BE101-04 Introduction to Electronics Engg.

Course Objectives:

1. To introduce to the students the fundamental concepts of electronic devices and circuits for engineering applications
2. To develop the skill of analysis and design of various analog circuits using electronic devices
3. To provide comprehensive idea about working principle, operation and applications of electronic circuits
4. To equip the students with a sound understanding of fundamental concepts of operational amplifiers
5. To expose to the diversity of operations that operational amplifiers can perform in a wide range of applications
6. To expose to a variety of electronic circuits/systems using various analog ICs

Syllabus

RC Circuits, Diode Circuits, Regulated power supplies, **Field effect transistor,** DC analysis of BJT, RC Coupled amplifier, MOSFET amplifiers, Feedback amplifiers, Power amplifiers, Oscillators, Multivibrators, Operational Amplifier and its applications, Timer IC

Expected Outcome:

Students will be able to

1. explain, illustrate, and design the different electronic circuits using electronic components
2. design circuits using operational amplifiers for various applications

Text Books:

1. David A Bell, Electronic Devices and Circuits, Oxford University Press, 2008
2. Salivahanan S. and V. S. K. Bhaaskaran, Linear Integrated Circuits, Tata McGraw Hill, 2008

References :

1. Neamen D., Electronic Circuits, Analysis and Design, 3/e, TMH, 2007
2. Robert Boylestad and L Nashelsky, Electronic Devices and Circuit Theory, Pearson.
3. Bogart T. F., Electronic Devices Circuits, 6/e, Pearson, 2012.
4. Maini A. K. and V. Agrawal, Electronic Devices and Circuits, Wiley India, 2011.
5. K.Gopakumar, Design and Analysis of Electronic Circuits, Phasor Books, Kollam, 2013
6. Millman J. and C. Halkias, Integrated Electronics, 2/e, McGraw-Hill, 2010.

Course Plan

Module	Contents	Hours (40)	Sem Exam Marks
1	**Wave shaping circuits:** Sinusoidal and non-sinusoidal wave shapes, Principle and working of RC differentiating and integrating circuits, Conversion of one non-sinusoidal wave shape into another. Clipping circuits - Positive, negative and biased clipper.	5	15%

NEHRU COLLEGE OF ENGINEERING & RESEARCH CENTRE
PAMPADY THIRUVILWAMALA THRISSUR DT

PRINCIPAL
Nehru College of
Engineering and Research Centre
Pampady Thiruvilwamala Thrissur Dt
Pin 680 597 Kerala

	Clamping circuits - Positive, negative and biased clamper. Voltage multipliers- Voltage doubler and tripler. Simple sweep circuit using transistor as a switch.		
2	**Regulated power supplies:** Review of simple zener voltage regulator, Shunt and series voltage regulator using transistors, Current limiting and fold back protection, 3 pin regulators-78XX and 79XX, IC 723 and its use as low and high voltage regulators, DC to DC conversion, Circuit/block diagram and working of SMPS	4	15 %
	Field effect transistors: JFET – Structure, principle of operation and characteristics, Comparison with BJT. MOSFET- Structure, Enhancement and Depletion types, principle of operation and characteristics.	3	
	FIRST INTERNAL EXAM		
3	**Amplifiers:** Introduction to transistor biasing, operating point, concept of load line, thermal stability, fixed bias, self bias, voltage divider bias. Classification of amplifiers, RC coupled amplifier - voltage gain and frequency response. Multistage amplifiers - effect of cascading on gain and bandwidth. Feedback in amplifiers - Effect of negative feedback on amplifiers. MOSFET Amplifier- Circuit diagram and working of common source MOSFET amplifier.	7	15 %
4	**Oscillators:** Classification, criterion for oscillation, analysis of Wien bridge oscillator, Hartley and Crystal oscillator. Non-sinusoidal oscillators: Astable, monostable and bi-stable multivibrators using transistors (Only design equations and working of circuit are required, Analysis not required).	5	15 %
	SECOND INTERNAL EXAM		
5	**Operational amplifiers:** Differential amplifier, characteristics of op-amps(gain, bandwidth, slew rate, CMRR, offset voltage, offset current), comparison of ideal and practical op-amp(IC741), applications of op-amps- scale changer, sign changer, adder/summing amplifier, subtractor, integrator, differentiator, Schmitt trigger, Wien bridge oscillator.	8	20 %

NEHRU COLLEGE OF ENGINEERING & RESEARCH CENTRE THRISSUR

PRINCIPAL
Nehru College of
Engineering and Research Centre
Pampady, Thiruvilwamala, Thrissur
Pin - 680 597, Kerala

6	**Integrated circuits:** Active filters – Low pass and high pass (first and second order) active filters using op-amp with gain (No analysis required). D/A and A/D convertors – important specifications, Sample and hold circuit. Binary weighted resistor and R-2R ladder type D/A convertors. (concepts only). Flash, dual slope and successive approximation type A/D convertors. Circuit diagram and working of Timer IC555, astable and monostablemultivibrators using 555.	8	20 %
END SEMESTER EXAM			

Question Paper Pattern:

1. There will be *five* parts in the question paper – A, B, C, D, E
2. Part A
   a. Total marks : 12
   b. *Four* questions each having *3* marks, uniformly covering module I and II; All *four* questions have to be answered.
3. Part B
   a. Total marks : 18
   b. *Three* questions each having *9* marks, uniformly covering module I and II; T*wo* questions have to be answered. Each question can have a maximum of three subparts
4. Part C
   a. Total marks : 12
   b. *Four* questions each having *3* marks, uniformly covering module III and IV, All *four* questions have to be answered.
5. Part D
   a. Total marks : 18
   b. *Three* questions each having *9* marks, uniformly covering module III and IV; T*wo* questions have to be answered. Each question can have a maximum of three subparts

6. Part E
   a. Total Marks: 40
   b. *Six* questions each carrying 10 marks, uniformly covering modules V and VI; *four* questions have to be answered.
   c. A question can have a maximum of three sub-parts.

7. There should be at least 60% analytical/numerical/design questions.

NEHRU COLLEGE OF ENGINEERING RESEARCH CENTRE THIRUVILWAMALA THRISSUR

PRINCIPAL
Nehru College of
Engineering and Research Centre
Pampady, Thiruvilwamala, Thrissur Dt
Pin - 680 597, Kerala

Course code	Course Name	L-T-P -Credits	Year of Introduction
CS202	**Computer Organization and Architecture**	**3-1-0-4**	**2016**

Pre-requisite: CS203 Switching theory and logic design

Course Objectives

1. To impart an understanding of the internal organization and operations of a computer.
2. To introduce the concepts of processor logic design and control logic design.

Syllabus

Fundamental building blocks and functional units of a computer. Execution phases of an instruction. Arithmetic Algorithms. Design of the processing unit – how arithmetic and logic operations are performed. Design of the control unit – hardwired and microprogrammed control. I/O organisation – interrupts, DMA, different interface standards. Memory Subsystem – different types.

Expected outcome

Students will be able to:

1. identify the basic structure and functional units of a digital computer.
2. analyze the effect of addressing modes on the execution time of a program.
3. design processing unit using the concepts of ALU and control logic design.
4. identify the pros and cons of different types of control logic design in processors.
5. select appropriate interfacing standards for I/O devices.
6. identify the roles of various functional units of a computer in instruction execution.

Text Books:

1. Hamacher C., Z. Vranesic and S. Zaky, *Computer Organization* ,5/e, McGraw Hill, 2011.
2. Mano M. M., Digital Logic & Computer Design, 4/e, Pearson Education, 2013.

References:

1. Mano M. M., Digital Logic & Computer Design, 4/e, Pearson Education, 2013.
2. Patterson D.A. and J. L. Hennessey, Computer Organization and Design, 5/e, Morgan Kauffmann Publishers, 2013.
3. William Stallings, Computer Organization and Architecture: Designing for Performance, Pearson, 9/e, 2013.
4. Chaudhuri P., Computer Organization and Design, 2/e, Prentice Hall, 2008.
5. Rajaraman V. and T. Radhakrishnan, Computer Organization and Architecture, Prentice Hall, 2011.
6. Messmer H. P., The Indispensable PC Hardware Book, 4/e, Addison-Wesley, 2001

Course Plan

Module	Contents	Hours (51)	Sem.ExamMarks
I	**Basic Structure of computers**–functional units – basic operational concepts –bus structures – software. Memory locations and addresses – memory operations – instructions and instruction sequencing – addressing modes – ARM Example (programs not required). Basic I/O operations – stacks subroutine calls.	6	15%

PRINCIPAL
Nehru College of Engineering and Research Centre
Pampady, Thrissur Dt

II	**Basic processing unit** – fundamental concepts – instruction cycle - execution of a complete instruction –multiple- bus organization – sequencing of control signals. **Arithmetic algorithms:** Algorithms for multiplication and division of binary and BCD numbers — array multiplier —Booth's multiplication algorithm — restoring and non-restoring division — algorithms for floating point, multiplication and division.	10	15%
FIRST INTERNAL EXAMINATION			
III	**I/O organization:** accessing of I/O devices – interrupts –direct memory access –buses –interface circuits –standard I/O interfaces (PCI, SCSI, USB)	8	15%
IV	**Memory system :** basic concepts –semiconductor RAMs –memory system considerations – semiconductor ROMs –flash memory –cache memory and mapping functions.	9	15%
SECOND INTERNAL EXAMINATION			
V	**Processor Logic Design:** Register transfer logic – inter register transfer – arithmetic, logic and shift micro operations –conditional control statements. **Processor organization:**–design of arithmetic unit, logic unit, arithmetic logic unit and shifter –status register –processor unit –design of accumulator.	9	20%
VI	**Control Logic Design:** Control organization – design of hardwired control –control of processor unit –PLA control. **Micro-programmed control:** Microinstructions –horizontal and vertical micro instructions – micro-program sequencer –micro programmed CPU organization.	9	20%
END SEMESTER EXAM			

NEHRU COLLEGE OF ENGINEERING & RESEARCH CENTRE
THIRUVILWAMALA, THRISSUR-DT

PRINCIPAL
Nehru College of
Engineering and Research Centre
Pampady Thiruvilwamala Thrissur Dt
Pin 680 597 Kerala

Question Paper Pattern:

1. There will be *five* parts in the question paper – A, B, C, D, E
2. Part A
   a. Total marks : 12
   b. *Four* questions each having *3* marks, uniformly covering module I and II; All *four* questions have to be answered.
3. Part B
   a. Total marks : 18
   b. *Three* questions each having *9* marks, uniformly covering module I and II; T*wo* questions have to be answered. Each question can have a maximum of three subparts
4. Part C
   a. Total marks : 12
   b. *Four* questions each having *3* marks, uniformly covering module III and IV; All *four* questions have to be answered.
5. Part D
   a. Total marks : 18
   b. *Three* questions each having *9* marks, uniformly covering module III and IV; T*wo* questions have to be answered. Each question can have a maximum of three subparts
6. Part E
   a. Total Marks: 40
   b. *Six* questions each carrying 10 marks, uniformly covering modules V and VI; *four* questions have to be answered.
   c. A question can have a maximum of three sub-parts.
7. There should be at least 60% analytical/numerical/design questions..

NEHRU COLLEGE OF ENGINEERING & RESEARCH CENTRE THRISSUR DT

PRINCIPAL
Nehru College of
Engineering and Research Centre
Pampady, Thiruvilwamala, Thrissur Dt
Pin - 680 597 Kerala

Course code	Course Name	L-T-P -Credits	Year of Introduction
CS204	Operating Systems	3-1-0-4	2016

Pre-requisite: CS205 Data structures

Course Objectives

1. To impart fundamental understanding of the purpose, structure, functions of operating system.
2. To impart the key design issues of an operating system

Syllabus

Basic concepts of Operating System, its structure, Process management, inter-process communication, process synchronization, CPU Scheduling, deadlocks, Memory Management, swapping, segmentation, paging, Storage Management - disk scheduling, RAID, File System Interface-implementation. Protection.

Expected outcome

Students will be able to:

1. identify the significance of operating system in computing devices.
2. exemplify the communication between application programs and hardware devices through system calls.
3. compare and illustrate various process scheduling algorithms.
4. apply appropriate memory and file management schemes.
5. illustrate various disk scheduling algorithms.
6. appreciate the need of access control and protection in an operating system.

Text Book:

1. Abraham Silberschatz, Peter B Galvin, Greg Gagne, Operating System Concepts, 9/e, Wiley India, 2015.

References:

1. Garry Nutt, Operating Systems: 3/e, Pearson Education, 2004
2. Bhatt P. C. P., An Introduction to Operating Systems: Concepts and Practice, 3/e, Prentice Hall of India, 2010.
3. William Stallings, Operating Systems: Internals and Design Principles, Pearson, Global Edition, 2015.
4. Andrew S Tanenbaum, Herbert Bos, Modern Operating Systems, Pearson, 4/e, 2015.
5. Madnick S. and J. Donovan, Operating Systems, McGraw Hill, 2001.
6. Hanson P. B., Operating System Principle, Prentice Hall of India, 2001.
7. Deitel H. M., An Introduction to Operating System Principles, Addison-Wesley, 1990.

Course Plan

Module	Contents	Hours (52)	Sem. Exam marks

NEHRU COLLEGE OF ENGINEERING & RESEARCH CENTRE
PRINCIPAL
Nehru College of Engineering and Research Centre
Pampady, Thiruvilwamala, Thrissur Dt
Pin - 680 597 Kerala

I	**Introduction**: Functions of an operating system. Single processor, multiprocessor and clustered systems – overview. Kernel Data Structures – Operating Systems used in different computing environments. **Operating System Interfaces and implementation** - User Interfaces, System Calls – examples. Operating System implementation - approaches. Operating System Structure – Monolithic, Layered, Micro-kernel, Modular. System Boot process.	7	15%
II	**Process Management**: Process Concept – Processes-States – Process Control Block – Threads. Scheduling – Queues – Schedulers – Context Switching. Process Creation and Termination. **Inter Process Communication**: Shared Memory, Message Passing, Pipes.	9	15%
FIRST INTERNAL EXAMINATION			
III	**Process Synchronization**: Critical Section-Peterson's solution. Synchronization – Locks, Semaphores, Monitors, Classical Problems – Producer Consumer, Dining Philosophers and Readers-Writers Problems	9	15%
IV	**CPU Scheduling** – Scheduling Criteria – Scheduling Algorithms. **Deadlocks** – Conditions, Modeling using graphs. Handling – Prevention – Avoidance – Detection-Recovery.	8	15%
SECOND INTERNAL EXAMINATION			
V	**Memory Management**: Main Memory – Swapping – Contiguous Memory allocation – Segmentation – Paging – Demand paging	9	20%
VI	**Storage Management:** *Overview of mass storage structure- disks and tapes. Disk structure – accessing disks.* Disk scheduling and management. Swap Space. **File System Interface**: File Concepts – Attributes – operations – types – structure – access methods. File system mounting. Protection. File system implementation. Directory implementation – allocation methods. Free space Management. **Protection**– Goals, Principles, Domain. Access Matrix.	10	20%
END SEMESTER EXAM			

PRINCIPAL
Nehru College of
Engineering and Research Centre
Pampad, Thiruvilwamala, Thrissur Dt

Question Paper Pattern:

1. There will be *five* parts in the question paper – A, B, C, D, E
2. Part A
   a. Total marks : 12
   b. *Four* questions each having *3* marks, uniformly covering module I and II; All *four* questions have to be answered.
3. Part B
   a. Total marks : 18
   b. *Three* questions each having *9* marks, uniformly covering module I and II; T*wo* questions have to be answered. Each question can have a maximum of three subparts
4. Part C
   a. Total marks : 12
   b. *Four* questions each having *3* marks, uniformly covering module III and IV; All *four* questions have to be answered.
5. Part D
   a. Total marks : 18
   b. *Three* questions each having *9* marks, uniformly covering module III and IV; T*wo* questions have to be answered. Each question can have a maximum of three subparts
6. Part E
   a. Total Marks: 40
   b. *Six* questions each carrying 10 marks, uniformly covering modules V and VI; *four* questions have to be answered.
   c. A question can have a maximum of three sub-parts.
7. There should be at least 60% analytical/numerical/design questions.

NEHRU COLLEGE OF ENGINEERING & RESEARCH CENTRE
THIRUVILWAMALA, THRISSUR-DT

PRINCIPAL
Nehru College of
Engineering and Research Centre
Pambady, Thiruvilwamala, Thrissur Dt
Pin - 680 597, Kerala

Course code	Course Name	L-T-P - Credits	Year of Introduction
CS206	**Object Oriented Design and Programming**	**2-1-0-3**	**2016**

Pre-requisite: CS205 Data structures

Course Objectives

1. To introduce basic concepts of object oriented design techniques.
2. To give a thorough understanding of Java language.
3. To provide basic exposure to the basics of multithreading, database connectivity etc.
4. To impart the techniques of creating GUI based applications.

Syllabus

Object oriented concepts, Object oriented systems development life cycle, Unified Modeling Language, Java Overview, Classes and objects, Parameter passing, Overloading, Inheritance, Overriding, Packages, Exception Handling, Input/Output, Threads and multithreading, Applets, Event Handling mechanism, Working with frames and graphics, AWT Controls, Swings, Java database connectivity.

Expected outcome.

Students will be able to:

1. apply object oriented principles in software design process.
2. develop Java programs for real applications using java constructs and libraries.
3. understand and apply various object oriented features like inheritance, data abstraction, encapsulation and polymorphism to solve various computing problems using
   Java language.
4. implement Exception Handling in java.
5. use graphical user interface and Event Handling in java.
6. develop and deploy Applet in java.

Text Books:

1. Herbert Schildt, Java: The Complete Reference, 8/e, Tata McGraw Hill, 2011.
2. Bahrami A., Object Oriented Systems Development using the Unified Modeling Language, McGraw Hill, 1999.

References:

1. Y. Daniel Liang, Introduction to Java Programming, 7/e, Pearson, 2013.
2. Nageswararao R., Core Java: An Integrated Approach, Dreamtech Press, 2008.
3. Flanagan D., Java in A Nutshell, 5/e, O'Reilly, 2005
4. Barclay K., J. Savage, Object Oriented Design with UML and Java, Elsevier, 2004.
5. Sierra K., Head First Java, 2/e, O'Reilly, 2005.
6. Balagurusamy E., Programming JAVA a Primer, 5/e, McGraw Hill, 2014.
7.

Course Plan

Module	Contents	Hours (42)	Sem. ExamMarks
1	Object oriented concepts, Object oriented systems development life cycle. Unified Modeling Language, UML class diagram, Use-case diagram. Java Overview: Java virtual machine, *data types, operators, control statements,* Introduction to Java programming.	08	15%

NEHRU COLLEGE OF ENGINEERING & RESEARCH CENTRE
PAMPADY THIRUVILWAMALA, THRISSUR-DT

PRINCIPAL
Nehru College of
Engineering and Research Centre
Pampady Thiruvilwamala Thrissur Dt
Pin 680 597 Kerala

II	Classes fundamentals, objects, methods, constructors, parameter passing, overloading, access control keywords.	07	15%
FIRST INTERNAL EXAMINATION			
III	Inheritance basics, method overriding, abstract classes, interface. Defining and importing packages. Exception handling fundamentals, multiple catch and nested try statements.	06	15%
IV	Input/Output: files, stream classes, reading console input. Threads: thread model, use of Thread class and Runnable interface, thread synchronization, multithreading.	06	15%
SECOND INTERNAL EXAMINATION			
V	String class - basics. Applet basics and methods. Event Handling: delegation event model, event classes, sources, listeners.	07	20%
VI	Introduction to AWT: working with frames, graphics, color, font. AWT Control fundamentals. Swing overview. Java database connectivity: JDBC overview, creating and executing queries, dynamic queries.	08	20%
END SEMESTER EXAM			

Question Paper Pattern:

1. There will be *five* parts in the question paper – A, B, C, D, E
2. Part A
   a. Total marks : 12
   b. *Four* questions each having *3* marks, uniformly covering module I and II; All *four* questions have to be answered.
3. Part B
   a. Total marks : 18
   b. *Three* questions each having *9* marks, uniformly covering module I and II; T*wo* questions have to be answered. Each question can have a maximum of three subparts
4. Part C
   a. Total marks : 12
   b. *Four* questions each having *3* marks, uniformly covering module III and IV, All *four* questions have to be answered.
5. Part D
   a. Total marks : 18
   b. *Three* questions each having *9* marks, uniformly covering module III and IV; Two questions have to be answered. Each question can have a maximum of three subparts

NEHRU COLLEGE OF ENGINEERING & RESEARCH CENTRE THIRUVILWAMALA THRISSUR

PRINCIPAL
Nehru College of
Engineering and Research Centre
Pampady Thiruvilwamala Thrissur Dt
Pin 680 597 Kerala

6. Part E
    a. Total Marks: 40
    b. *Six* questions each carrying 10 marks, uniformly covering modules V and VI; *four* questions have to be answered.
    c. A question can have a maximum of three sub-parts.

7. There should be at least 60% analytical/design questions.

NEHRU COLLEGE OF ENGINEERING & RESEARCH CENTRE
THIRUVILWAMALA, THRISSUR-DT.
PIN-680597

PRINCIPAL
Nehru College of
Engineering and Research Centre
Pampady, Thiruvilwamala, Thrissur Dt
Pin 680 597 Kerala

Course code	Course Name	L-T-P - Credits	Year of Introduction
CS208	Principles of Database Design	2-1-0-3	2016

Pre-requisite: CS205 Data structures

Course Objectives

- To impart the basic understanding of the theory and applications of database management systems.
- To give basic level understanding of internals of database systems.
- To expose to some of the recent trends in databases.

Syllabus:

Types of data, database and DBMS, Languages and users. Software Architecture, E-R and Extended E-R Modelling, Relational Model – concepts and languages, relational algebra and tuple relational calculus, SQL, views, assertions and triggers, relational db design, FDs and normal forms, Secondary storage organization, indexing and hashing, query optimization, concurrent transaction processing and recovery principles, recent topics.

Expected outcome

Students will be able to:

1. define, explain and illustrate the fundamental concepts of databases.
2. construct an Entity-Relationship (E-R) model from specifications and to perform the transformation of the conceptual model into corresponding logical data structures.
3. model and design a relational database following the design principles.
4. develop queries for relational database in the context of practical applications
5. define, explain and illustrate fundamental principles of data organization, query optimization and concurrent transaction processing.
6. appreciate the latest trends in databases.

Text Books:

1. Elmasri R. and S. Navathe, *Database Systems: Models, Languages, Design andApplication Programming*, Pearson Education, 2013.
2. Sliberschatz A., H. F. Korth and S. Sudarshan, *Database System Concepts*, 6/e, McGraw Hill, 2011.

References:

1. Powers S., *Practical RDF*, O'Reilly Media, 2003.
2. Plunkett T , B. Macdonald, *et al.*, *Oracle Big Data Hand Book*, Oracle Press, 2013.

Course Plan

Module	Contents	Hours (42)	Sem. Exam Marks
I	**Introduction:** Data: structured, semi-structured and unstructured data, Concept & Overview of DBMS, Data Models, Database Languages, Database Administrator, Database Users, Three Schema architecture of DBMS. Database architectures and classification. (Reading: Elmasri Navathe, Ch. 1 and 2. Additional Reading: Silbershatz, Korth, Ch. 1) **Entity-Relationship Model:** Basic concepts, Design Issues, Mapping Constraints, Keys, Entity-	06	15%

NEHRU COLLEGE OF ENGINEERING & RESEARCH CENTRE THIRUVALLA, THRISSUR

PRINCIPAL
Nehru College of
Engineering and Research Centre
Thirumalayampady, Thiruvalla, Thrissur Dt
Pin-680627, Kerala

	Relationship Diagram, Weak Entity Sets, Relationships of degree greater than 2 (Reading: Elmasri Navathe, Ch. 7.1-7.8)		
II	**Relational Model:** Structure of relational Databases, Integrity Constraints, synthesizing ER diagram to relational schema (Reading: Elmasri Navathe, Ch. 3 and 8.1, Additional Reading: Silbershatz, Korth, Ch. 2.1-2.4) **Database Languages:** Concept of DDL and DML relational algebra (Reading: Silbershatz, Korth, Ch 2.5-2.6 and 6.1-6.2, Elmasri Navathe, Ch. 6.1-6.5)	**06**	**15%**
FIRST INTERNAL EXAM			
III	**Structured Query Language (SQL)**: Basic SQL Structure, examples, Set operations, Aggregate Functions, nested sub-queries (Reading: Elmasri Navathe, Ch. 4 and 5.1) **Views, assertions and triggers** (Reading: Elmasri Navathe, Ch. 5.2-5.3, Optional reading: Silbershatz, Korth Ch. 5.3).	**07**	**15%**
IV	**Relational Database Design:** Different anomalies in designing a database, normalization, functional dependency (FD), Armstrong's Axioms, closures, Equivalence of FDs, minimal Cover (proofs not required). Normalization using functional dependencies, INF, 2NF, 3NF and BCNF, lossless and dependency preserving decompositions (Reading: Elmasri and Navathe, Ch. 14.1-14.5, 15.1-15.2. Additional Reading: Silbershatz, Korth Ch. 8.1-8.5)	**07**	**15%**
SECOND INTERNAL EXAM			
V	**Physical Data Organization**: index structures, primary, secondary and clustering indices, Single level and Multi-level indexing, B+-Trees (basic structure only, algorithms not needed), (Reading Elmasri and Navathe, Ch. 17.1-17.4) **Query Optimization**: heuristics-based query optimization, (Reading Elmasri and Navathe, Ch. 18.1, 18.7)	**07**	**20%**
VI	**Transaction Processing Concepts:** overview of concurrency control and recovery acid properties, serial and concurrent schedules, conflict serializability. Two-phase locking, failure classification, storage structure, stable storage, log based recovery, deferred database modification, check-pointing, (Reading Elmasri and Navathe, Ch. 20.1-20.5 (except 20.5.4-20.5.5) , Silbershatz, Korth Ch. 15.1 (except 15.1.4-15.1.5), Ch. 16.1 – 16.5) **Recent topics (preliminary ideas only):** Semantic Web and RDF(Reading: Powers Ch.1, 2), GIS, biological databases (Reading: Elmasri and Navathe Ch. 23.3-23.4) Big Data (Reading: Plunkett and Macdonald, Ch. 1, 2)	**09**	**20%**
END SEMESTER EXAM			

NEHRU COLLEGE OF ENGINEERING & RESEARCH CENTRE THRISSUR-DT

PRINCIPAL
Nehru College of
Engineering and Research Centre
Pampady, Thiruvilwamala, Thrissur Dt
Pin - 680 597, Kerala

Question Paper Pattern:

1. There will be *five* parts in the question paper – A, B, C, D, E
2. Part A
   a. Total marks : 12
   b. *Four* questions each having *3* marks, uniformly covering module I and II; All *four* questions have to be answered.
3. Part B
   a. Total marks : 18
   b. *Three* questions each having *9* marks, uniformly covering module I and II; *Two* questions have to be answered. Each question can have a maximum of three subparts
4. Part C
   a. Total marks : 12
   b. *Four* questions each having *3* marks, uniformly covering module III and IV; All *four* questions have to be answered.
5. Part D
   a. Total marks : 18
   b. *Three* questions each having *9* marks, uniformly covering module III and IV; *Two* questions have to be answered. Each question can have a maximum of three subparts
6. Part E
   a. Total Marks: 40
   b. *Six* questions each carrying 10 marks, uniformly covering modules V and VI, *four* questions have to be answered.
   c. A question can have a maximum of three sub-parts.
7. There should be at least 60% analytical/numerical/design questions.

NEHRU COLLEGE OF ENGINEERING & RESEARCH CENTRE THRISSUR

PRINCIPAL
Nehru College of
Engineering and Research Centre
Pampady Thiruvilwamala Thrissur Dt
Pin 680 597 Kerala

Course code	Course Name	L-T-P Credits	Year of Introduction
CS301	THEORY OF COMPUTATION	3-1-0-4	2016

Prerequisite: Nil

Course Objectives

- To introduce the concept of formal languages.
- To discuss the Chomsky classification of formal languages with discussion on grammar and automata for regular, context-free, context sensitive and unrestricted languages.
- To discuss the notions of decidability and halting problem.

Syllabus

Introduction to Automata Theory, Structure of an automaton, classification of automata, grammar and automata for generating each class of formal languages in the Chomsky Hierarchy, decidability and Halting problem.

Expected Outcome

The Students will be able to

i. Classify formal languages into regular, context-free, context sensitive and unrestricted languages.
ii. Design finite state automata, regular grammar, regular expression and Myhill- Nerode relation representations for regular languages.
iii. Design push-down automata and context-free grammar representations for context-free languages.
iv. Design Turing Machines for accepting recursively enumerable languages.
v. Understand the notions of decidability and undecidability of problems, Halting problem.

Text Books

1. John E Hopcroft, Rajeev Motwani and Jeffrey D Ullman, Introduction to Automata Theory, Languages, and Computation, 3/e, Pearson Education, 2007
2. John C Martin, Introduction to Languages and the Theory of Computation, TMH, 2007
3. Michael Sipser, Introduction To Theory of Computation, Cengage Publishers, 2013

References

1. Dexter C Kozen, Automata and Computability, Springer1999.

Course Plan

Module	Contents	Hours	End Sem. Exam Marks
I	Introduction to Automata Theory and its significance. **Type 3 Formalism:** Finite state automata – Properties of transition functions, Designing finite automata, NFA, Finite Automata with Epsilon Transitions, Equivalence of NFA and DFA, Conversion of NFA to DFA, Equivalence and Conversion of NFA with and without Epsilon Transitions.	10	15 %
II	Myhill-Nerode Theorem, Minimal State FA Computation. Finite State Machines with Output- Mealy and Moore machine (Design Only), Two- Way Finite Automata. Regular Grammar, Regular Expressions, Equivalence of regular expressions and NFA with epsilon transitions. Converting Regular Expressions to NFA with epsilon transitions Equivalence of DFA and regular expressions, converting DFA to Regular Expressions.	10	15 %

NEHRU COLLEGE OF ENGINEERING & RESEARCH CENTRE
PIRAMADOM THIRUVILWAMALA THRISSUR-DT

PRINCIPAL
Nehru College of
Engineering and Research Centre
Pampady, Thiruvilwamala, Thrissur Dt
Pin - 680 597, Kerala

FIRST INTERNAL EXAM			
III	Pumping Lemma for Regular Languages, Applications of Pumping Lemma. Closure Properties of Regular sets (Proofs not required), Decision Problems related with Type 3 Formalism **Type 2 Formalism:-** Context-Free Languages (CFL), Context-Free Grammar (CFG), Derivation trees, Ambiguity, Simplification of CFG, Chomsky Normal Form, Greibach normal forms	**09**	**15 %**
IV	Non-Deterministic Pushdown Automata (NPDA), design. Equivalence of acceptance by final state and empty stack in PDA. Equivalence between NPDA and CFG, Deterministic Push Down Automata, Closure properties of CFLs (Proof not required), Decision Problems related with Type 3 Formalism.	**08**	**15 %**
SECOND INTERNAL EXAM			
V	Pumping Lemma for CFLs, Applications of Pumping Lemma. **Type 1 Formalism:** Context-sensitive Grammar. Linear Bounded Automata (Design not required) **Type 0 Formalism:** Turing Machine (TM) – Basics and formal definition, TMs as language acceptors, TMs as Transducers, Designing Turing Machines.	**09**	**20 %**
VI	Variants of TMs -Universal Turing Machine, Multi- tape TMs, Non Deterministic TMs, Enumeration Machine (Equivalence not required), Recursively Enumerable Languages, Recursive languages, Properties of Recursively Enumerable Languages and Recursive Languages, Decidability and Halting Problem. Chomsky Hierarchy	**08**	**20 %**
END SEMESTER EXAM			

Question Paper Pattern

1. There will be *five* parts in the question paper – A, B, C, D, E
2. Part A
   a. Total marks : 12 b. *Four* questions each having *3* marks, uniformly covering modules I and II; All*four* questions have to be answered.
3. Part B
   a. Total marks : 18 b. *Three* questions each having *9* marks, uniformly covering modules I and II; T*wo* questions have to be answered. Each question can have a maximum of three subparts.
4. Part C
   a. Total marks : 12 b. *Four* questions each having *3* marks, uniformly covering modules III and IV; All*four* questions have to be answered.
5. Part D
   a. Total marks : 18 b. *Three* questions each having *9* marks, uniformly covering modules III and IV; *Two* questions have to be answered. Each question can have a maximum of three subparts
6. Part E
   a. Total Marks: 40 b. *Six* questions each carrying 10 marks, uniformly covering modules V and VI, *four* questions have to be answered. A question can have a maximum of three sub-parts.

There should be at least 60% analytical/numerical questions.

NEHRU COLLEGE OF ENGINEERING & RESEARCH CENTRE THEKKAMPADY THRISSUR-DT

PRINCIPAL
Nehru College of
Engineering and Research Centre
Pampady Thrissur Dt
Pin Kerala

Course code	Course Name	L-T-P Credits	Year of Introduction
CS303	SYSTEM SOFTWARE	2-1-0-3	2016

Prerequisite: Nil

Course Objectives

- To make students understand the design concepts of various system software like Assembler, Linker, Loader and Macro pre-processor, Utility Programs such as Text Editor and Debugger.

Syllabus

Different types of System Software, SIC & SIC/XE Architecture and Programming, Basic Functions of Assembler, Assembler Design, Single pass and 2 Pass Assemblers and their Design, Linkers and Loaders, Absolute Loader and Relocating loader, Design of Linking Loader, Macro Processor and its design, Fundamentals of Text Editor Design, Operational Features of Debuggers

Expected Outcome

The Students will be able to

i. distinguish different software into different categories..
ii. design, analyze and implement one pass, two pass or multi pass assembler.
iii. design, analyze and implement loader and linker.
iv. design, analyze and implement macro processors.
v. critique the features of modern editing /debugging tools.

Text book

1. Leland L. Beck, System Software: An Introduction to Systems Programming, 3/E, Pearson Education Asia, 1997.

References

1 D.M. Dhamdhere, Systems Programming and Operating Systems, Second Revised Edition, Tata McGraw Hill.
2. http://gcc.gnu.org/onlinedocs/gcc-2.95.3/cpp_1.html - The C Preprocessor
3. J Nithyashri, System Software, Second Edition, Tata McGraw Hill.
4. John J. Donovan, Systems Programming, Tata McGraw Hill Edition 1991.
5. Jonathan Corbet, Alessandro Rubini, Greg Kroah-Hartman, Linux Device Drivers, Third Edition, O.Reilly Books
6. M. Beck, H. Bohme, M. Dziadzka, et al., Linux Kernel Internals, Second Edition, Addison Wesley Publications,
7. Peter Abel, IBM PC Assembly Language and Programming, Third Edition, Prentice Hall of India.
8. Writing UNIX device drivers - George Pajari – Addison Wesley Publications (Ebook : http://tocs.ulb.tu-darmstadt.de/197262074.pdf).

Course Plan

Module	Contents	Hours	End Sem Exam. Marks

NEHRU COLLEGE OF ENGINEERING & RESEARCH CENTRE
THIRUVILWAMALA, THRISSUR DT

PRINCIPAL
Nehru College of
Engineering and Research Centre
Pampady, Thiruvilwamala, Thrissur Dt
PIN 680 597 Kerala

I	***Introduction :*** System Software Vs. Application Software, Different System Software– Assembler, Linker, Loader, Macro Processor, Text Editor, Debugger, Device Driver, Compiler, Interpreter, Operating System(Basic Concepts only) SIC & SIC/XE Architecture, Addressing modes, SIC & SIC/XE Instruction set, Assembler Directives and Programming.	2 6	15%
II	***Assemblers*** Basic Functions of Assembler. Assembler output format – Header, Text and End Records- Assembler data structures, Two pass assembler algorithm, Hand assembly of SIC/XE program, Machine dependent assembler features.	6	15 %
FIRST INTERNAL EXAM			
III	***Assembler design options:*** Machine Independent assembler features – program blocks, Control sections, Assembler design options- Algorithm for Single Pass assembler, Multi pass assembler, Implementation example of MASM Assembler	7	15 %
IV	***Linker and Loader*** Basic Loader functions - Design of absolute loader, Simple bootstrap Loader, Machine dependent loader features- Relocation, Program Linking, Algorithm and data structures of two pass Linking Loader, Machine dependent loader features, Loader Design Options.	7	15 %
SECOND INTERNAL EXAM			
V	***Macro Preprocessor:-*** Macro Instruction Definition and Expansion. One pass Macro processor Algorithm and data structures, Machine Independent Macro Processor Features, Macro processor design options	7	20 %
VI	***Device drivers:*** Anatomy of a device driver, Character and block device drivers, General design of device drivers ***Text Editors:*** Overview of Editing, User Interface, Editor Structure. ***Debuggers :-*** Debugging Functions and Capabilities, Relationship with other parts of the system, Debugging Methods- By Induction, Deduction and Backtracking.	2 2 4	20 %
END SEMESTER EXAM			

NEHRU COLLEGE OF ENGINEERING & RESEARCH CENTRE
THIRUVILWAMALA
THRISSUR DT

PRINCIPAL
Nehru College of
Engineering and Research Centre
Pampady Thiruvilwamala Thrissur Dt
Pin 680 597 Kerala

Question Paper Pattern

1. There will be *five* parts in the question paper – A, B, C, D, E
2. Part A
   a. Total marks : 12
   b. *Four* questions each having *3* marks, uniformly covering modules I and II; All*four* questions have to be answered.
3. Part B
   a. Total marks : 18
   b. *Three* questionseach having *9* marks, uniformly covering modules I and II; T*wo* questions have to be answered. Each question can have a maximum of three subparts.
4. Part C
   a. Total marks : 12
   b. *Four* questions each having *3* marks, uniformly covering modules III and IV; All*four* questions have to be answered.
5. Part D
   a. Total marks : 18
   b. *Three* questions each having *9* marks, uniformly covering modules III and IV; *Two* questions have to be answered. Each question can have a maximum of three subparts
6. Part E
   a. Total Marks: 40
   b. *Six* questions each carrying 10 marks, uniformly covering modules V and VI; *four* questions have to be answered.
   c. A question can have a maximum of three sub-parts.

7. There should be at least 60% analytical/numerical questions.

NEHRU COLLEGE OF ENGINEERING & RESEARCH CENTRE
Estd. 2014
PRINCIPAL
Nehru College of
Engineering and Research Centre
Pampady, Thiruvilwamala, Thrissur Dt
Pin - 680 597, Kerala

Course code.	Course Name	L-T-P-Credits	Year of Introduction
CS307	DATA COMMUNICATION	3-0-0-3	2016

Prerequisite: Nil

Course Objectives

- To introduce fundamental communication models.
- To discuss various time domain and frequency domain concepts of data communication.
- To introduce the concepts of encoding, multiplexing and spread spectrum.

Syllabus

Data Transmission, Transmission Impairments, Channel Capacity, Transmission media, Wireless propagation, Signal encoding Techniques, Multiplexing, Digital data transmission techniques, Sampling theorem, Error detection and correction, Spread spectrum, Basic principles of switching.

Expected Outcome

The Students will be able to

i. Identify and list the various issues present in the design of a data communication system.
ii. Apply the time domain and frequency domain concepts of signals in data communication.
iii. Compare and select transmission media based on transmission impairments and channel capacity.
iv. Select and use appropriate signal encoding techniques and multiplexing techniques for a given scenario.
v. Design suitable error detection and error correction algorithms to achieve error free data communication and explain different switching techniques.

Text Books

1. Curt M. White, Fundamentals of Networking and Communication 7/e, Cengage learning. [Chapter 3,4,9,10]
2. Forouzan B. A., Data Communications and Networking, 5/e, Tata McGraw Hill, 2013. [Chapters:3,4, 5, 6,7,8]
3. Schiller J., Mobile Communications, 2/e, Pearson Education, 2009. [Chapters:2,3]
4. William Stallings, Data and Computer Communication 9/e, Pearson Education, Inc. [Chapters: 4, 5, 6, 7, 8, 9].

References

1. Forouzan B. A., Data Communications and Networking, 4/e, Tata McGraw Hill, 2007.
2. Tanenbaum A. S. and D. Wetherall, Computer Networks, Pearson Education, 2013.

COURSE PLAN

Module	Contents	Hours	End Sem. Exam Marks

PRINCIPAL
Nehru College of
Engineering and Research Centre
Panipady Thiruvilwamala, T
Pin 680 597 Kera

NEHRU COLLEGE OF ENGINEERING RESEARCH CENTRE
THIRUVILWAMALA, THRISSUR

I	Data Transmission: Communication model Simplex, half duplex and full duplex transmission - Periodic Analog signals: Sine wave, phase, wavelength, time and frequency domain, bandwidth - Digital Signals; Digital data Transmission:- Analog & Digital data, Analog & Digital signals, Analog &Digital transmission – Transmission Impairments: Attenuation, Delay distortion, Noise - Channel capacity: Nyquist Bandwidth, Shannon's Capacity formula.	08	15%
II	Transmission media - Guided Transmission Media: Twisted pair, Coaxial cable, optical fiber, Wireless Transmission, Terrestrial microwave, Satellite microwave. Wireless Propagation: Ground wave propagation, Sky Wave propagation, LoS Propagation.	07	15%
FIRST INTERNAL EXAM			
III	Signal Encoding techniques - Digital Data Digital Signals: NRZ, Multilevel binary, Biphase - Digital Data Analog Signals : ASK, FSK, PSK - Analog Data Digital Signals: Sampling theorem, PCM, Delta Modulation - Analog Data Analog Signals: AM, FM, PM.	07	15%
IV	Multiplexing- Space Division Multiplexing-Frequency Division Multiplexing: Wave length Division Multiplexing - Time Division multiplexing: Characteristics, Digital Carrier system, SONET/SDH- Statistical time division multiplexing: Cable Modem - Code Division Multiplexing. Multiple Access– CDMA.	07	15%
SECOND INTERNAL EXAM			
V	Digital Data Communication Techniques - Asynchronous transmission, Synchronous transmission-Detecting and Correcting Errors-Types of Errors-Error Detection: Parity check, Cyclic Redundancy Check (CRC) - Error Control Error Correction: Forward Error Correction and Hamming Distance.	06	20%
VI	Spread Spectrum Techniques-Direct Sequence Spread Spectrum (DSSS), Frequency Hopping Spread Spectrum (FHSS). Basic principles of switching - Circuit Switched Networks, Structure of Circuit Switch - Packet Switching: Datagram Networks, Virtual Circuit Networks, Structure of packet switches.	07	20%
END SEMESTER EXAM			

Question Paper Pattern

1. There will be *five* parts in the question paper – A, B, C, D, E
2. Part A
   a. Total marks : 12
   b. *Four* questions each having *3* marks, uniformly covering modules I and II. All *four* questions have to be answered.
3. Part B

PRINCIPAL
Nehru College of
Engineering and Research Centre
Thrissur Dt

a. Total marks : 18
b. *Three*questions each having *9* marks, uniformly covering modules I and II; T*wo* questions have to be answered. Each question can have a maximum of three subparts.

4. Part C
   a. Total marks : 12
   b. *Four* questions each having *3* marks, uniformly covering modules III and IV; All*four* questions have to be answered.
5. Part D
   a. Total marks : 18
   b. *Three*questionseach having *9* marks, uniformly covering modules III and IV; *Two* questions have to be answered. Each question can have a maximum of three subparts
6. Part E
   a. Total Marks: 40
   b. *Six* questions each carrying 10 marks, uniformly covering modules V and VI; *four* questions have to be answered.
   c. A question can have a maximum of three sub-parts.
7. There should be at least 60% analytical/numerical questions.

NEHRU COLLEGE OF ENGINEERING & RESEARCH CENTRE
PANIPADY
THIRUVILWAMALA,
THRISSUR-DT.

PRINCIPAL
Nehru College of
Engineering and Research Centre
Panipady, Thiruvilwamala Thrissur Dt
Pin 680 597 Kerala

Course code	Course Name	L-T-P Credits	Year of Introduction
CS361	SOFT COMPUTING	3-0-0-3	2016

Prerequisite: Nil

Course Objectives

- To introduce the concepts in Soft Computing such as Artificial Neural Networks, Fuzzy logic-based systems, genetic algorithm-based systems and their hybrids.

Syllabus

Introduction to Soft Computing, Artificial Neural Networks, Fuzzy Logic and Fuzzy systems, Genetic Algorithms, hybrid systems.

Expected Outcome

The Students will be able to

1. Learn soft computing techniques and their applications.
2. Analyze various neural network architectures.
3. Define the fuzzy systems.
4. Understand the genetic algorithm concepts and their applications.
5. Identify and select a suitable Soft Computing technology to solve the problem; construct a solution and implement a Soft Computing solution.

Text Books

1. S. N. Sivanandam and S. N.Deepa, Principles of soft computing – John Wiley & Sons, 2007.
2. Timothy J. Ross, Fuzzy Logic with engineering applications , John Wiley & Sons, 2016.

References

1. N. K. Sinha and M. M. Gupta, Soft Computing & Intelligent Systems: Theory & Applications-Academic Press /Elsevier. 2009.
2. Simon Haykin, Neural Network- A Comprehensive Foundation- Prentice Hall International, Inc.1998
3. R. Eberhart and Y. Shi, Computational Intelligence: Concepts to Implementation, Morgan Kaufman/Elsevier, 2007.
4. Driankov D., Hellendoorn H. and Reinfrank M., An Introduction to Fuzzy Control-Narosa Pub., 2001.
5. Bart Kosko, Neural Network and Fuzzy Systems- Prentice Hall, Inc., Englewood Cliffs, 1992
6. Goldberg D.E., Genetic Algorithms in Search, Optimization, and Machine Learning-Addison Wesley, 1989.

Course Plan

Module	Contents	Hours	End Sem. Exam Marks
I	Introduction to Soft Computing Artificial neural networks - biological neurons, Basic models of artificial neural networks – Connections, Learning, Activation Functions, McCulloch and Pitts Neuron, Hebb network.	07	15%
II	Perceptron networks – Learning rule – Training and testing algorithm, Adaptive Linear Neuron, Back propagation Network – Architecture, Training algorithm	07	15%
	FIRST INTERNAL EXAM		

NEHRU COLLEGE OF ENGINEERING & RESEARCH CENTRE
PAMPADY THIRUVILWAMALA THRISSUR-DT.
PRINCIPAL
Nehru College of Engineering and Research Centre
Pampady, Thiruvilwamala, Thrissur Dt
Pin 680 597 Kerala

III	Fuzzy logic - fuzzy sets - properties - operations on fuzzy sets, fuzzy relations - operations on fuzzy relations	**07**	**15%**
IV	Fuzzy membership functions, fuzzification, Methods of membership value assignments – intuition – inference – rank ordering, Lambda – cuts for fuzzy sets, Defuzzification methods	**07**	**15%**
SECOND INTERNAL EXAM			
V	Truth values and Tables in Fuzzy Logic, Fuzzy propositions, Formation of fuzzy rules - Decomposition of rules – Aggregation of rules, Fuzzy Inference Systems - Mamdani and Sugeno types, Neuro-fuzzy hybrid systems – characteristics - classification	**07**	**20%**
VI	Introduction to genetic algorithm, operators in genetic algorithm - coding - selection - cross over – mutation, Stopping condition for genetic algorithm flow, Genetic-neuro hybrid systems, Genetic-Fuzzy rule based system	**07**	**20%**
END SEMESTER EXAMINATION			

Question Paper Pattern

1. There will be *five* parts in the question paper – A, B, C, D, E
2. Part A
   a. Total marks : 12
   b. *Four* questions each having *3* marks, uniformly covering modules I and II; All *four* questions have to be answered.
3. Part B
   a. Total marks : 18
   b. *Three* questions each having *9* marks, uniformly covering modules I and II; *Two* questions have to be answered. Each question can have a maximum of three sub-parts
4. Part C
   a. Total marks : 12
   b. *Four* questions each having *3* marks, uniformly covering modules III and IV; All *four* questions have to be answered.
5. Part D
   a. Total marks : 18
   b. *Three* questions each having *9* marks, uniformly covering modules III and IV, *Two* questions have to be answered. Each question can have a maximum of three subparts
6. Part E
   a. Total Marks: 40
   b. *Six* questions each carrying 10 marks, uniformly covering modules V and VI; *four* questions have to be answered.
   c. A question can have a maximum of three sub-parts.
7. There should be at least 60% analytical/numerical/design questions.

NEHRU COLLEGE OF ENGINEERING & RESEARCH CENTRE
PAMPADY THIRUVILWAMALA THRISSUR-DT.

PRINCIPAL
Nehru College of
Engineering and Research Centre
Pampady, Thiruvilwamala, Thrissur Dt
Pin - 680 597 Kerala

Course code	Course Name	L-T-P-Credits	Year of Introduction
CS365	OPTIMIZATION TECHNIQUES	3-0-0-3	2016

Prerequisite: Nil

Course Objectives

- To build an understanding on the basics of optimization techniques.
- To introduce basics of linear programming and meta- heuristic search techniques.

Syllabus

Basics of Operations Research - Formulation of optimization problems - Linear Programming - Transportation Problem - Assignment Problem - Network flow Problem - Tabu Search - Genetic Algorithm - Simulated Annealing – Applications.

Expected Outcome

The Students will be able to

i. Formulate mathematical models for optimization problems.
ii. Analyze the complexity of solutions to an optimization problem.
iii. Design programs using meta-heuristic search concepts to solve optimization problems.
iv. Develop hybrid models to solve an optimization problem.

Text Books

1. G. Zapfel, R. Barune and M. Bogl, Meta heuristic search concepts: A tutorial with applications to production and logistics, Springer, 2010.
2. Hamdy A. Taha, Operations Research – An introduction, Pearson Education, 2010.
3. Rao S.S., Optimization Theory and Applications, Wiley Eastern, 1984.

References

1. Gass S. I., Introduction to Linear Programming, Tata McGraw Hill.
2. Goldberg, Genetic algorithms in Search, optimization and Machine Learning, Addison Wesley, 1989.
3. K. Deb, Optimization for engineering design – algorithms and examples, Prentice Hall of India, 2004.
4. Reeves C., Modern heuristic techniques for combinatorial problems, Orient Longman, 1993.

COURSE PLAN

Module	Contents	Hours	End Sem. Exam Marks
I	Decision-making procedure under certainty and under uncertainty - Operations Research-Probability and decision- making- Queuing or Waiting line theory-Simulation and Monte- Carlo Technique- Nature and organization of optimization problems- Scope and hierarchy of optimization- Typical applications of optimization.	08	15%
II	Essential features of optimization problems - Objective function- Continuous functions - Discrete functions - Unimodal functions - Convex and concave functions, Investment costs and operating costs in objective function - Optimizing profitably constraints-Internal and external constraints-Formulation of optimization problems. Continuous functions - Discrete functions - Unimodal functions - Convex and concave functions.	07	15%

NEHRU COLLEGE OF ENGINEERING & RESEARCH CENTRE
PAMPADY THIRUVILWAMALA THRISSUR DT

PRINCIPAL
Nehru College of
Engineering and Research Centre
Pampady Thiruvilwamala, Thrissur Dt
Pin 680 597 Kerala

FIRST INTERNAL EXAM			
III	Necessary and sufficient conditions for optimum of unconstrained functions-Numerical methods for unconstrained functions - One-dimensional search - Gradient-free search with fixed step size. Linear Programming - Basic concepts of linear programming - Graphical interpretation-Simplex method - Apparent difficulties in the Simplex method.	**06**	**15%**
IV	Transportation Problem, Loops in transportation table, Methods of finding initial basic feasible solution, Tests for optimality. Assignment Problem, Mathematical form of assignment problem, methods of solution.	**06**	**15%**
SECOND INTERNAL EXAM			
V	Network analysis by linear programming and shortest route, maximal flow problem. Introduction to Non-traditional optimization, Computational Complexity – NP-Hard, NP-Complete. Tabu Search-Basic Tabu search, Neighborhood, Candidate list, Short term and Long term memory	**07**	**20%**
VI	Genetic Algorithms- Basic concepts, Encoding, Selection, Crossover, Mutation. Simulated Annealing - Acceptance probability, Cooling, Neighborhoods, Cost function. Application of GA and Simulated Annealing in solving sequencing and scheduling problems and Travelling salesman problem.	**08**	**20%**
END SEMESTER EXAM			

Question Paper Pattern

1. There will be *five* parts in the question paper – A, B, C, D, E
2. Part A
   a. Total marks : 12
   b. *Four* questions each having *3* marks, uniformly covering modules I and II; All*four* questions have to be answered
3. Part B
   a. Total marks : 18
   b. *Three*questions each having *9* marks, uniformly covering modules I and II; *Two* questions have to be answered. Each question can have a maximum of three subparts.
4. Part C
   a. Total marks : 12
   b. *Four* questions each having *3* marks, uniformly covering modules III and IV; All*four* questions have to be answered.
5. Part D
   a. Total marks : 18
   b. *Three*questions each having *9* marks, uniformly covering modules III and IV; *Two* questions have to be answered. Each question can have a maximum of three subparts

NEHRU COLLEGE OF ENGINEERING AND RESEARCH CENTRE THIRUVILWAMALA THRISSUR-DT

PRINCIPAL
Nehru College of
Engineering and Research Centre
Pampady Thiruvilwamala Thrissur Dt
Pin 680 597 Kerala

6. Part E
    a. Total Marks: 40
    b. *Six* questions each carrying 10 marks, uniformly covering modules V and VI; *four* questions have to be answered.
    c. A question can have a maximum of three sub-parts.

7. There should be at least 60% analytical/numerical questions.

NEHRU COLLEGE OF ENGINEERING & RESEARCH CENTRE
PAMPADY
THIRUVILWAMALA,
THRISSUR-DT

PRINCIPAL
Nehru College of
Engineering and Research Centre
Pampady Thiruvilwamala, Thrissur Dt
Pin 680 597 Kerala

Course code	Course Name	L-T-P - Credits	Year of Introduction
CS302	Design and Analysis of Algorithms	3-1-0-4	2016

Prerequisite: Nil

Course Objectives

- To introduce the concepts of Algorithm Analysis, Time Complexity, Space Complexity.
- To discuss various Algorithm Design Strategies with proper illustrative examples.
- To introduce Complexity Theory.

Syllabus

Introduction to Algorithm Analysis, Notions of Time and Space Complexity, Asymptotic Notations, Recurrence Equations and their solutions, Master's Theorem, Divide and Conquer and illustrative examples, AVL trees, Red-Black Trees, Union-find algorithms, Graph algorithms, Divide and Conquer, Dynamic Programming, Greedy Strategy, Back Tracking and Branch and Bound, Complexity classes

Expected outcome

The students will be able to

i. Analyze a given algorithm and express its time and space complexities in asymptotic notations.
ii. Solve recurrence equations using Iteration Method, Recurrence Tree Method and Master's Theorem.
iii. Design algorithms using Divide and Conquer Strategy.
iv. Compare Dynamic Programming and Divide and Conquer Strategies.
v. Solve Optimization problems using Greedy strategy.
vi. Design efficient algorithms using Back Tracking and Branch Bound Techniques for solving problems.
vii. Classify computational problems into P, NP, NP-Hard and NP-Complete.

Text Books

1. Ellis Horowitz, SartajSahni, SanguthevarRajasekaran, Computer Algorithms, Universities Press, 2007 [Modules 3,4,5]
2. Thomas H. Cormen, Charles E. Leiserson, Ronald L. Rivest, Clifford Stein, Introduction to Algorithms, MIT Press, 2009 [Modules 1,2,6]

References

1. Alfred V. Aho, John E. Hopcroft and Jeffrey D. Ullman, The Design and Analysis of Computer Algorithms, Pearson Education, 1999.
2. Anany Levitin, Introduction to the Design and Analysis of Algorithms, Pearson, 3rd Edition, 2011.
3. Gilles Brassard, Paul Bratley, Fundamentals of Algorithmics, Pearson Education, 1995.
4. Richard E. Neapolitan, Kumarss Naimipour, Foundations of Algorithms using C++ Psuedocode, Second Edition, 1997.

Course Plan

Module	Contents	Hours	End Sem. Exam Marks

NEHRU COLLEGE OF ENGINEERING & RESEARCH CENTRE
THIRUVILWAMALA, THRISSUR DT.

PRINCIPAL
Nehru College of Engineering and Research Centre
Pampady, Thiruvilwamala, Trissur Dt
Pin 680 597 Kerala

I	***Introduction to Algorithm Analysis***Time and Space Complexity- Elementary operations and Computation of Time Complexity- Best, worst and Average Case Complexities- Complexity Calculation of simple algorithms ***Recurrence Equations:***Solution of Recurrence Equations – Iteration Method and Recursion Tree Methods	04 04	15 %
II	***Master's Theorem***(Proof not required) – examples, Asymptotic Notations and their properties- Application of Asymptotic Notations in Algorithm Analysis- Common Complexity Functions ***AVL Trees*** – rotations, Red-Black Trees insertion and deletion (Techniques only; algorithms not expected). B-Trees – insertion and deletion operations. Sets- Union and find operations on disjoint sets.	05 05	15%
FIRST INTERNAL EXAM			
III	***Graphs*** – DFS and BFS traversals, complexity, Spanning trees – Minimum Cost Spanning Trees, single source shortest path algorithms, Topological sorting, strongly connected components.	07	15%
IV	***Divide and Conquer:***The Control Abstraction, 2 way Merge sort, Strassen's Matrix Multiplication, Analysis ***Dynamic Programming :*** The control Abstraction- The Optimality Principle- Optimal matrix multiplication, Bellman-Ford Algorithm	04 05	15%
SECOND INTERNAL EXAM			
V	Analysis, Comparison of Divide and Conquer and Dynamic Programming strategies ***Greedy Strategy:*** - The Control Abstraction- the Fractional Knapsack Problem, Minimal Cost Spanning Tree Computation- Prim's Algorithm – Kruskal's Algorithm.	02 04 03	20%
VI	***Back Tracking:*** -The Control Abstraction – The N Queen's Problem, 0/1 Knapsack Problem ***Branch and Bound:***Travelling Salesman Problem. ***Introduction to Complexity Theory :-***Tractable and Intractable Problems- The P and NP Classes- Polynomial Time Reductions - The NP- Hard and NP-Complete Classes	03 03 03	20%
END SEMESTER EXAM			

Question Paper Pattern

1. There will be *five* parts in the question paper – A, B, C, D, E
2. Part A
   a. Total marks : 12
   b. *Four* questions each having 3 marks, uniformly covering modules I and II; All *four* questions have to be answered.
3. Part B
   a. Total marks : 18
   b. *Three* questions each having 9 marks, uniformly covering modules I and II; *Two* questions have to be answered. Each question can have a maximum of three subparts.
4. Part C

NEHRU COLLEGE OF ENGINEERING & RESEARCH CENTRE
THIRUVILWAMALA, THRISSUR

PRINCIPAL
Nehru College of
Engineering and Research Centre
Pampady, Thiruvilwamala, Thrissur Dt
Pin 680 597 Kerala

a. Total marks : 12
b. *Four* questions each having *3* marks, uniformly covering modules III and IV; All*four* questions have to be answered.

5. Part D
   a. Total marks : 18
   b. *Three* questions each having *9* marks, uniformly covering modules III and IV; *Two* questions have to be answered. Each question can have a maximum of three subparts
6. Part E
   a. Total Marks: 40
   b *Six* questions each carrying 10 marks, uniformly covering modules V and VI: *four* questions have to be answered.
   c. A question can have a maximum of three sub-parts.

7. There should be at least 60% analytical/numerical questions.

NEHRU COLLEGE OF ENGINEERING & RESEARCH CENTRE
PAMPADY THIRUVILWAMALA THRISSUR DT.

PRINCIPAL
Nehru College of
Engineering and Research Centre
Pampady Thiruvilwamala, Thrissur Dt
Pin 680 597 Kerala

Course code	Course Name	L-T-P Credits	Year of Introduction
CS304	COMPILER DESIGN	3-0-0-3	2016

Prerequisite: Nil

Course Objectives

- To provide a thorough understanding of the internals of Compiler Design.

Syllabus

Phases of compilation, Lexical analysis, Token Recognition, Syntax analysis, Bottom Up and Top Down Parsers, Syntax directed translation schemes, Intermediate Code Generation, Triples and Quadruples, Code Optimization, Code Generation.

Expected Outcome

The students will be able to

i. Explain the concepts and different phases of compilation with compile time error handling.
ii. Represent language tokens using regular expressions, context free grammar and finite automata and design lexical analyzer for a language.
iii. Compare top down with bottom up parsers, and develop appropriate parser to produce parse tree representation of the input.
iv. Generate intermediate code for statements in high level language.
v. Design syntax directed translation schemes for a given context free grammar.
vi. Apply optimization techniques to intermediate code and generate machine code for high level language program.

Text Books

1. Aho A. Ravi Sethi and D Ullman. Compilers – Principles Techniques and Tools, Addison Wesley, 2006.
2. D. M.Dhamdhare, System Programming and Operating Systems,Tata McGraw Hill & Company, 1996

References

1. Kenneth C. Louden, Compiler Construction – Principles and Practice, Cengage Learning Indian Edition, 2006.
2. Tremblay and Sorenson, The Theory and Practice of Compiler Writing, Tata McGraw Hill & Company,1984.

Course Plan

Module	Contents	Hours	End Sem. Exam Marks
I	Introduction to compilers – Analysis of the source program, Phases of a compiler, Grouping of phases, compiler writing tools – bootstrapping **Lexical Analysis**: The role of Lexical Analyzer, Input Buffering, Specification of Tokens using Regular Expressions, Review of Finite Automata, Recognition of Tokens.	07	15%
II	**Syntax Analysis:** Review of Context-Free Grammars – Derivation trees and Parse Trees, Ambiguity. **Top-Down Parsing**: Recursive Descent parsing, Predictive parsing, LL(1) Grammars.	06	15%

NEHRU COLLEGE OF ENGINEERING & RESEARCH CENTRE
Pampady Thiruvilwamala Thrissur-Dt

PRINCIPAL
Nehru College of
Engineering and Research Centre
Pampady, Thiruvilwamala, Thrissur Dt
Pin - 680 597, Kerala

FIRST INTERNAL EXAM			
III	**Bottom-Up Parsing**: Shift Reduce parsing – Operator precedence parsing (Concepts only) LR parsing – Constructing SLR parsing tables, Constructing, Canonical LR parsing tables and Constructing LALR parsing tables.	**07**	**15%**
IV	**Syntax directed translation**: Syntax directed definitions, Bottom- up evaluation of S-attributed definitions, L- attributed definitions, Top-down translation, Bottom-up evaluation of inherited attributes. **Type Checking :** Type systems, Specification of a simple type checker.	**08**	**15%**
SECOND INTERNAL EXAM			
V	**Run-Time Environments:** Source Language issues, Storage organization, Storage-allocation strategies. **Intermediate Code Generation (ICG)**: Intermediate languages – Graphical representations, Three-Address code, Quadruples, Triples. Assignment statements, Boolean expressions.	**07**	**20%**
VI	**Code Optimization:**Principal sources of optimization, Optimization of Basic blocks **Code generation**: Issues in the design of a code generator. The target machine, A simple code generator.	**07**	**20%**
END SEMESTER EXAM			

Question Paper Pattern

1. There will be *five* parts in the question paper – A, B, C, D, E
2. Part A

a. Total marks : 12 b.. *Four* questions each having *3* marks, uniformly covering modules I and II; All*four* questions have to be answered.

3. Part B

a. Total marks : 18 b. *Three* questionseach having *9* marks, uniformly covering modules I and II; *Two* questions have to be answered. Each question can have a maximum of three subparts.

4. Part C

a. Total marks : 12 b. *Four* questions each having *3* marks, uniformly covering modules III and IV; All *four* questions have to be answered.

5. Part D

a. Total marks : 18 b. *Three* questions each having *9* marks, uniformly covering modules III and IV; *Two* questions have to be answered. Each question can have a maximum of three subparts

6. Part E

b. Total Marks: 40 b. *Six* questions each carrying 10 marks, uniformly covering modules V and VI; *four* questions have to be answered.

c. A question can have a maximum of three sub-parts.

7. There should be at least 60% analytical/numerical questions.

PRINCIPAL
Nehru College of
Engineering and Research Centre
Pampady, Thiruvilwamala, Thrissur Dt
Pin Kerala

NEHRU COLLEGE OF ENGINEERING & RESEARCH CENTRE
PAMPADY
THIRUVILWAMALA
THRISSUR DT

Course code	Course Name	L-T-P - Credits	Year of Introduction
CS306	Computer Networks	3-0-0-3	2016

Prerequisite: Nil

Course Objectives

- To build an understanding of the fundamental concepts of computer networking.
- To introduce the basic taxonomy and terminology of computer networking.
- To introduce advanced networking concepts.

Syllabus

Concept of layering, LAN technologies (Ethernet), Flow and error control techniques, switching, IPv4/IPv6, routers and routing algorithms (distance vector, link state), TCP/UDP and sockets, congestion control, Application layer protocols.

Expected Outcome

The students will be able to

i. Visualise the different aspects of networks, protocols and network design models.
ii. Examine various Data Link layer design issues and Data Link protocols.
iii. Analyse and compare different LAN protocols.
iv. Compare and select appropriate routing algorithms for a network.
v. Examine the important aspects and functions of network layer, transport layer and application layer in internetworking.

Text Books

1. Andrew S. Tanenbaum, Computer Networks, 4/e, PHI.
2. Behrouz A. Forouzan, Data Communications and Networking, 4/e, Tata McGraw Hill.
3. Larry L. Peterson & Bruce S. Dave, Computer Networks-A Systems Approach, 5/e, Morgan Kaufmann, 2011.

References

1. Fred Halsall, Computer Networking and the Internet, 5/e.
2. James F Kurose, Keith W. Ross, Computer Networking: A Top-Down Approach, 6/e.
3. Keshav, An Engineering Approach to Computer Networks, Addison Wesley, 1998.
4. Request for Comments (RFC) Pages - IETF -https://www.ietf.org/rfc.html
5. W. Richard Stevens. TCP/IP Illustrated volume 1, Addison-Wesley, 2005.
6. William Stallings, Computer Networking with Internet Protocols, Prentice-Hall, 2004.

Course Plan

Module	Contents	Hours	End Sem. Exam Marks
I	Introduction – Uses – Network Hardware – LAN –MAN – WAN, Internetworks – Network Software – Protocol hierarchies – Design issues for the layers – Interface & Service – Service Primitives. Reference models – OSI – TCP/IP.	07	15%
II	Data Link layer Design Issues – Flow Control and ARQ techniques. Data link Protocols – HDLC. DLL in Internet. MAC Sub layer – IEEE 802 FOR LANs & MANs, IEEE 802.3, 802.4, 802.5 Bridges - Switches – High Speed LANs - Gigabit Ethernet. Wireless LANs - 802.11 a/b/g/n, 802.15.PPP	08	15%
	FIRST INTERNAL EXAMINATION		

NEHRU COLLEGE OF ENGINEERING & RESEARCH CENTRE THIRUVALLAMALA THRISSUR-DT

PRINCIPAL
Nehru College of Engineering and Research Centre
Thiruvallamala, Thrissur Dt
Pin 680 587

III	Network layer – Routing – Shortest path routing, Flooding, Distance Vector Routing, Link State Routing, RIP, OSPF, Routing for mobile hosts.	**07**	**15%**
IV	Congestion control algorithms – QoS. Internetworking – Network layer in internet. IPv4 - IP Addressing – Classless and Classfull Addressing. Sub-netting.	**07**	**15%**
SECOND INTERNAL EXAMINATION			
V	Internet Control Protocols – ICMP, ARP, RARP, BOOTP. Internet Multicasting – IGMP, Exterior Routing Protocols – BGP. IPv6 – Addressing – Issues, ICMPv6.	**07**	**20%**
VI	Transport Layer – TCP & UDP. Application layer –FTP, DNS, Electronic mail, MIME, SNMP. Introduction to World Wide Web.	**07**	**20%**
END SEMESTER EXAM			

Question Paper Pattern

1. There will be *five* parts in the question paper – A, B, C, D, E
2. Part A
   a. Total marks : 12
   b. *Four* questions each having *3* marks, uniformly covering modules I and II;All*four* questions have to be answered.
3. Part B
   a. Total marks : 18
   b. *Three* questions each having *9* marks, uniformly covering modules I and II; *Two* questions have to be answered. Each question can have a maximum of three subparts.
4. Part C
   a. Total marks : 12
   b. *Four* questions each having *3* marks, uniformly covering modules III and IV; All*four* questions have to be answered.
5. Part D
   a. Total marks : 18
   b. *Three* questions each having *9* marks, uniformly covering modules III and IV; *Two* questions have to be answered. Each question can have a maximum of three subparts
6. Part E
   a. Total Marks: 40
   b. *Six* questions each carrying 10 marks, uniformly covering modules V and VI; *four* questions have to be answered.
   c. A question can have a maximum of three sub-parts.

7. There should be at least 60% analytical/numerical questions.

NEHRU COLLEGE OF ENGINEERING & RESEARCH CENTRE THIRUVILWAMALA, THRISSUR DT.

PRINCIPAL
Nehru College of
Engineering and Research Centre
Pampady, Thiruvilwamala, Thrissur Dt
Pin 680 597 Kerala

Course code	Course Name	L-T-P-Credits	Year of Introduction
CS308	Software Engineering and Project Management	3-0-0-3	2016

Pre-requisite: Nil

Course Objectives

- To introduce the fundamental concepts of software engineering.
- To build an understanding on various phases of software development.
- To introduce various software process models.

Syllabus

Introduction to software engineering, Software process models, Software development phases, Requirement analysis, Planning, Design, Coding, Testing, Maintenance.

Expected Outcome

The students will be able to

i. Identify suitable life cycle models to be used.
ii. Analyze a problem and identify and define the computing requirements to the problem.
iii. Translate a requirement specification to a design using an appropriate software engineering methodology.
iv. Formulate appropriate testing strategy for the given software system.
v. Develop software projects based on current technology, by managing resources economically and keeping ethical values.

References

1. Ian Sommerville, Software Engineering, University of Lancaster, Pearson Education, Seventh edition, 2004.
2. K. K.Aggarwal and Yogesh Singh, Software Engineering, New age International Publishers, Second edition, 2005.
3. Roger S. Pressman, Software Engineering : A practitioner's approach, McGraw Hill publication, Eighth edition, 2014
4. S.A. Kelkar, Software Project Management: A concise study, PHI, Third edition, 2012.
5. Walker Royce, Software Project Management : A unified frame work, Pearson Education, 1998

COURSE PLAN

Module	Contents	Hours	End Sem. Exam Marks
I	Introduction to software engineering- scope of software	07	15%

NEHRU COLLEGE OF ENGINEERING & RESEARCH CENTRE

PRINCIPAL
Nehru College of Engineering and Research Centre
Pampady, Thiruvilwamala, Thrissur Dt
Pin

	engineering – historical aspects, economic aspects, maintenance aspects, specification and design aspects, team programming aspects. Software engineering a layered technology – processes, methods and tools. Software process models – prototyping models, incremental models, spiral model, waterfall model.		
II	Process Framework Models: Capability maturity model (CMM), ISO 9000. Phases in Software development – requirement analysis- requirements elicitation for software, analysis principles, software prototyping, specification.	**06**	**15%**
FIRST INTERNAL EXAM			
III	Planning phase – project planning objective, software scope, empirical estimation models- COCOMO, single variable model, staffing and personal planning. Design phase – design process, principles, concepts, effective modular design, top down, bottom up strategies, stepwise refinement.	**07**	**15%**
IV	Coding – programming practice, verification, size measures, complexity analysis, coding standards. Testing – fundamentals, white box testing, control structure testing, black box testing, basis path testing, code walk-throughs and inspection, testing strategies-Issues, Unit testing, integration testing, Validation testing, System testing.	**07**	**15%**
SECOND INTERNAL EXAM			
V	Maintenance-Overview of maintenance process, types of maintenance. Risk management: software risks - risk identification-risk monitoring and management. Project Management concept: People – Product-Process-Project.	**07**	**20%**
VI	Project scheduling and tracking: Basic concepts-relation between people and effort-defining task set for the software project-selecting software engineering task Software configuration management: Basics and standards User interface design - rules. Computer aided software engineering tools - CASE building blocks, taxonomy of CASE tools, integrated CASE environment.	**08**	**20%**
END SEMESTER EXAM			

Question Paper Pattern

1. There will be *five* parts in the question paper – A, B, C, D, E
2. Part A
   a. Total marks : 12
   b. *Four* questions each having 3 marks, uniformly covering modules I and II;

PRINCIPAL
Nehru College of
Engineering and Research Centre
Pampady, Thiruvilwamala, Thrissur
Pin: 680588

All *four* questions have to be answered.

3. Part B
   a. Total marks : 18
   b. *Three* questions each having *9* marks, uniformly covering modules I and II; *Two* questions have to be answered. Each question can have a maximum of three subparts.
4. Part C
   a. Total marks : 12
   b. *Four* questions each having *3* marks, uniformly covering modules III and IV; All *four* questions have to be answered.
5. Part D
   a. Total marks : 18
   b. *Three* questions each having *9* marks, uniformly covering modules III and IV; *Two* questions have to be answered. Each question can have a maximum of three subparts
6. Part E
   a. Total Marks: 40
   b. *Six* questions each carrying 10 marks, uniformly covering modules V and VI; *four* questions have to be answered.
   c. A question can have a maximum of three sub-parts.

7. There should be at least 60% analytical/numerical questions.

NEHRU COLLEGE OF ENGINEERING & RESEARCH CENTRE
THIRUVILWAMALA THRISSUR-DT.
Estd. 2014
PRINCIPAL
Nehru College of
Engineering and Research Centre
Pampady, Thiruvilwamala, Thrissur Dt
Pin 680 597 Kerala

Course code	Course Name	L-T-P - Credits	Year of Introduction
CS364	Mobile Computing	3-0-0-3	2016

Pre-requisite: CS307 Data Communication

Course Objectives

- To impart basic understanding of the wireless communication systems.
- To expose students to various aspects of mobile and ad-hoc networks.

Syllabus

Mobile Computing Application and Services, Mobile Computing Architecture, Emerging Technologies, Intelligent Networks and Internet, Wireless LAN, MAC layer routing, Mobile transport layer Security Issues in mobile computing.

Expected Outcome

Student is able to

1. Explain various Mobile Computing application, services and architecture.
2. Understand various technology trends for next generation cellular wireless networks.
3. Describe protocol architecture of WLAN technology.
4. Understand Security Issues in mobile computing.

Text Books

1. Asoke K. Talukder, Hasan Ahmad, Mobile Computing Technology- Application and Service Creation, 2nd Edition, McGraw Hill Education.
2. Jochen Schiller, Mobile Communications, Pearson Education Asia, 2008.
3. Jonathan Rodriguez , Fundamentals of 5G Mobile Networks, ,Wiley Publishers, 2015
4. Theodore S. Rappaport, Wireless Communications Principles and Practice, 2/e, PHI, New Delhi, 2004.

References

1. Andrew S. Tanenbaum, Computer Networks, PHI, Third edition, 2003.

Course Plan

Module	Contents	Hours	End Sem. Exam Marks
I	Introduction to mobile computing, Middleware and Gateways, Application and services, Internet-Ubiquitous networks, Architecture and three-tier architecture for Mobile Computing, Design consideration for Mobile Computing.	06	15%
II	Spread spectrum – Direct sequence, Frequency hoping. Medium Access Control - SDMA, FDMA, TDMA, CDMA, Cellular concepts- channel assignment strategy- hand off strategy interface and system capacity- improving coverage and capacity in cellular system, Satellite Systems-GEO, LEO, MEO. Wireless Communication Systems- Telecommunication Systems- GSM-GSM services & features, architecture -DECT features & characteristics, architecture.	06	15%
FIRST INTERNAL EXAM			
III	Wireless LANS: Wireless LAN Standards – IEEE 802 Protocol Architecture, IEEE 802.11 System Architecture, Protocol Architecture & Services, Cellular Networks: Channel allocation, multiple access, location management, Handoffs. MAC Layer & Management, Routing - Classification of Routing	07	15%

PRINCIPAL
Nehru College of
Engineering and Research Centre
Pampady, Thiruvilwamala, Thrissur Dt
Pin 680 597 Kerala

	Algorithms, Algorithms such as DSR, AODV, DSDV, Mobile Agents, Service Discovery.		
IV	Mobile internet-mobile network layer-mobile IP-dynamic host configuration protocol-, mobile transport layer-implications of TCP on mobility-indirect TCP-snooping TCP- mobile TCP transmission-selective retransmission, Transaction oriented TCP- Support for mobility-file systems-WAP.	**07**	**15%**
SECOND INTERNAL EXAM			
V	Mobile Transport Layer - Conventional TCP/IP Protocols, Indirect TCP, Snooping TCP, Mobile TCP, Other Transport Layer Protocols for Mobile Networks. Protocols and Platforms for Mobile Computing - WAP, Bluetooth, XML, J2ME, JavaCard, PalmOS, Linux for Mobile Devices, Android.	**08**	**20%**
VI	Security issues in mobile computing, Information Security, Components of Information Security, Next Generation Networks-LTE – Architecture & Interface – LTE radio planning and tools, 5G architecture, MIMO, Super core concept, Features and Application Case Study – Setting up anadhoc network system, LiFi.	**08**	**20%**
END SEMESTER EXAM			

Question Paper Pattern

1. There will be *five* parts in the question paper – A, B, C, D, E
2. Part A
   a. Total marks : 12
   b. *Four* questions each having *3* marks, uniformly covering modules I and II; All*four* questions have to be answered.
3. Part B
   a. Total marks : 18
   b. *Three*questions each having *9* marks, uniformly covering modules I and II; *Two* questions have to be answered. Each question can have a maximum of three subparts.
4. Part C
   a. Total marks : 12
   b. *Four*questions each having *3* marks, uniformly covering modules III and IV; All*four* questions have to be answered.
5. Part D
   a. Total marks : 18
   b *Three* questions each having *9* marks, uniformly covering modules III and IV; *Two* questions have to be answered. Each question can have a maximum of three subparts
6. Part E
   a Total Marks: 40
   b *Six* questions each carrying 10 marks, uniformly covering modules V and VI; *Four* questions have to be answered.
   c. Each question can have a maximum of three sub-parts.

NEHRU COLLEGE OF ENGINEERING & RESEARCH CENTRE
THIRUVILWAMALA
THRISSUR-DT

PRINCIPAL
Nehru College of
Engineering and Research Centre
Pampady Thiruvilwamala Thrissur Dt
Pin 680 597 Kerala

Course code	Course Name	L-T-P - Credits	Year of Introduction
CS368	Web Technologies	3-0-0-3	2016

Prerequisite: Nil

Course Objectives

- To impart the design, development and implementation of Dynamic Web Pages.
- To develop programs for Web using Scripting Languages.
- To give an introduction to Data Interchange formats in Web.

Syllabus

Basics of Internet and World Wide Web, HTML and XHTML, Cascading Style Sheets, Frameworks, Basics of JavaScript, JQuery, Introduction to XML and JSON, Overview of PHP

Expected Outcome

The student will be able to

i. Understand different components in web technology and to know about CGI and CMS.
ii. Develop interactive Web pages using HTML/XHTML.
iii. Present a professional document using Cascaded Style Sheets.
iv. Construct websites for user interactions using JavaScript and JQuery.
v. Know the different information interchange formats like XML and JSON.
vi. Develop Web applications using PHP.

Text Books

1. P. J. Deitel, H.M. Deitel, Internet &World Wide Web How To Program, 4/e, Pearson International Edition 2010.
2. Robert W Sebesta, Programming the World Wide Web, 7/e, Pearson Education Inc., 2014.

References

1. Bear Bibeault and Yehuda Katz, jQuery in Action, Second Edition, Manning Publications.[Chapter 1]
   Black Book, Kogent Learning Solutions Inc. 2009.
2. Bob Boiko, Content Management Bible, 2nd Edition, Wiley Publishers. [Chapter 1, 2]
3. Chris Bates, Web Programming Building Internet Applications, 3/e, Wiley India Edition 2009.
4. Dream Tech, Web Technologies: HTML, JS, PHP, Java, JSP, ASP.NET, XML, AJAX,
5. Jeffrey C Jackson, Web Technologies A Computer Science Perspective, Pearson Education Inc. 2009.
6. Lindsay Bassett, Introduction to JavaScript Object Notation: A To-the-Point Guide to JSON 1st Edition, O'Reilly.[Chapter 1,2,3,4]
7. Matthew MacDonald, WordPress: The Missing Manual, 2nd Edition, O'Reilly Media. [Chapter 1]

Web Resources

1. www.w3.org/CGI/
2. old.tree.ro/en/strategy-white-papers/content-management-systems.pdf
3. httpd.apache.org/download.cgi
4. https://alistapart.com/article/frameworks
5. http://getbootstrap.com/css/
6. https://www.w3.org/TR/WD-DOM/introduction.html

Course Plan

Module	Contents	Hours	End Sem. Exam Marks

NEHRU COLLEGE OF ENGINEERING & RESEARCH CENTRE

PRINCIPAL
Nehru College of
Engineering and Research Centre
Pampady, Thiruvilwamala, Thrissur Dt
Pin 680 597 Kerala

I	**Introduction to the Internet:** The World Wide Web, Web Browsers, Web Servers, Uniform Resource Locators, Multipurpose Internet Mail Extensions, The Hypertext Transfer Protocol. Common Gateway Interface(CGI), Content Management System – Basics *Case Study:* Apache Server, WordPress.	**06**	**15%**
II	**Introduction to HTML/XHTML :** Origins and Evolution of HTML and XHTML, Basic Syntax of HTML, Standard HTML Document Structure, Basic Text Markup, Images, Hypertext Links, Lists, Tables, Forms, HTML5, Syntactic Differences between HTML and XHTML.	**07**	**15%**
FIRST INTERNAL EXAM			
III	**Introduction to Styles sheets and Frameworks** **Cascading Style Sheets:** Levels of Style Sheets - Style Specification Formats, Selector Forms, Property-Value Forms, Font Properties, List Properties, Alignment of Text, Color, The Box Model, Background Images, The span and div Tags. **Frameworks:** Overview and Basics of Responsive CSS Frameworks - Bootstrap.	**06**	**15%**
IV	**Introduction to JavaScript and jQuery** **The Basics of JavaScript:** Overview of JavaScript, Object Orientation and JavaScript, General Syntactic Characteristics-Primitives, Operations, and Expressions, Screen Output and Keyboard Input, Control Statements, Object Creation and Modification,Arrays, Functions. Callback Functions, Java Script HTML DOM. **Introduction to jQuery:** Overview and Basics.	**07**	**15%**
SECOND INTERNAL EXAMINATION			
V	**Introduction to Data Interchange Formats** **XML:** The Syntax of XML, XML Document Structure, Namespaces, XML Schemas, Displaying Raw XML Documents, Displaying XML Documents with CSS, XSLT Style Sheets, XML Applications. **JSON**(Basics Only): Overview, Syntax, Datatypes, Objects, Schema, Comparison with XML.	**08**	**20%**
VI	**Introduction to PHP**: Origins and Uses of PHP, Overview of PHP - General Syntactic Characteristics - Primitives, Operations, and Expressions - Control Statements, Arrays, Functions, Pattern Matching, Form Handling, Cookies, Session Tracking.	**08**	**20%**
END SEMESTER EXAM			

Assignment:

It is highly recommended to give assignment based on:

1. JavaScript Frameworks (like AngularJS or/and NodeJS)
2. Any PHP web app based on frameworks(like Laravel, CodeIgniter, CakePHP, Zend etc.)

NEHRU COLLEGE OF ENGINEERING & RESEARCH CENTRE
THIRUVILWAMALA, THRISSUR-DT
PRINCIPAL

PRINCIPAL
Nehru College of
Engineering and Research Centre
Pampady, Thiruvilwamala, Thrissur Dt
Pin: 680 597, Kerala

Question Paper Pattern

1. There will be *five* parts in the question paper – A, B, C, D, E
2. Part A
   a. Total marks : 12
   b. *Four* questions each having *3* marks, uniformly covering modules I and II; All *four* questions have to be answered.
3. Part B
   a. Total marks : 18
   b. *Three* questions each having *9* marks, uniformly covering modules I and II; *Two* questions have to be answered. Each question can have a maximum of three subparts.
4. Part C
   a. Total marks : 12
   b. *Four* questions each having *3* marks, uniformly covering modules III and IV; All *four* questions have to be answered.
5. Part D
   a. Total marks : 18
   b. *Three* questions each having *9* marks, uniformly covering modules III and IV; *Two* questions have to be answered. Each question can have a maximum of three subparts
6. Part E
   a. Total Marks: 40
   b. *Six* questions each carrying 10 marks, uniformly covering modules V and VI; *four* questions have to be answered.
   c. A question can have a maximum of three sub-parts.

NEHRU COLLEGE OF ENGINEERING & RESEARCH CENTRE
THIRUVILWAMALA, THRISSUR DT.

PRINCIPAL
Nehru College of
Engineering and Research Centre
Pampady, Thiruvilwamala, Thrissur Dt

Course code	Course Name	L-T-P Credits	Year of Introduction
CS401	COMPUTER GRAPHICS	**4-0-0-4**	**2016**

Course Objectives :

- To introduce concepts of graphics input and display devices.
- To discuss line and circle drawing algorithms.
- To introduce 2D and 3D transformations and projections.
- To introduce fundamentals of image processing.

Syllabus:

Basic Concepts in Computer Graphics. Input devices. Display devices. Line and circle drawing Algorithms. Solid area scan-conversion. Polygon filling. Two dimensional transformations. Windowing, clipping. 3D, Graphics, 3D transformations. Projections – Parallel, Perspective. Hidden Line Elimination Algorithms. Image processing – digital image representation – edge detection – Robert, Sobel, Canny edge detectors. Scene segmentation and labeling – region-labeling algorithm – perimeter measurement.

Expected Outcome:

The Students will be able to :

i. compare various graphics devices
ii. analyze and implement algorithms for line drawing, circle drawing and polygon filling
iii. apply geometrical transformation on 2D and 3D objects
iv. analyze and implement algorithms for clipping
v. apply various projection techniques on 3D objects
vi. summarize visible surface detection methods
vii. interpret various concepts and basic operations of image processing

Text Books:

1. Donald Hearn and M. Pauline Baker, Computer Graphics, PHI, 2e, 1996
2. E. Gose, R. Johnsonbaugh and S. Jost., Pattern Recognition and Image Analysis, PHI PTR, 1996 (Module VI – Image Processing part)
3. William M. Newman and Robert F. Sproull , Principles of Interactive Computer Graphics. McGraw Hill, 2e, 1979
4. Zhigang Xiang and Roy Plastock, Computer Graphics (Schaum's outline Series), McGraw Hill, 1986.

References:

1. David F. Rogers , Procedural Elements for Computer Graphics, Tata McGraw Hill, 2001.
2. M. Sonka, V. Hlavac, and R. Boyle, Image Processing, Analysis, and Machine Vision, Thomson India Edition, 2007.
3. Rafael C. Gonzalez and Richard E. Woods, Digital Image Processing, Pearson, 2017

NEHRU COLLEGE OF ENGINEERING & RESEARCH CENTRE
PRINCIPAL
Nehru College of
Engineering and Research Centre
Pampady, Thiruvilwamala, Thrissur Dt
Pin - 680 588, Kerala

Course Plan			
Module	**Contents**	**Hours**	**End Sem. Exam Marks**
I	Basic concepts in Computer Graphics – Types of Graphic Devices – Interactive Graphic inputs – Raster Scan and Random Scan Displays.	7	15%
II	Line Drawing Algorithm- DDA, Bresenham's algorithm – Circle Generation Algorithms –Mid point circle algorithm, Bresenham's algorithm- Scan Conversion-frame buffers – solid area scan conversion – polygon filling algorithms	8	15%
FIRST INTERNAL EXAM			
III	Two dimensional transformations. Homogeneous coordinate systems – matrix formulation and concatenation of transformations. Windowing concepts –Window to Viewport Transformation- Two dimensional clipping-Line clipping – Cohen Sutherland, Midpoint Subdivision algorithm	8	15%
IV	Polygon clipping-Sutherland Hodgeman algorithm, Weiler-Atherton algorithm. Three dimensional object representation-Polygon surfaces, Quadric surfaces – Basic 3D transformations	8	15%
SECOND INTERNAL EXAM			
V	Projections – Parallel and perspective projections – vanishing points. Visible surface detection methods– Back face removal- Z-Buffer algorithm, A-buffer algorithm, Depth-sorting method, Scan line algorithm.	9	20%
VI	Image processing – Introduction - Fundamental steps in image processing – digital image representations – relationship between pixels – gray level histogram –spatial convolution and correlation – edge detection – Robert, Prewitt, Sobel.	8	20%
END SEMESTER EXAM			

NEHRU COLLEGE OF ENGINEERING & RESEARCH CENTRE
THIRUVILWAMALA, THRISSUR-DT

PRINCIPAL
Nehru College of
Engineering and Research Centre
Pampady, Thiruvilwamala, Thrissur Dt

Question Paper Pattern (End semester exam)

1. There will be *FOUR* parts in the question paper – **A, B, C, D**
2. **Part A**
   a. **Total marks : 40**
   b. *TEN* questions, each have **4 marks**, covering **all the SIX modules** (***THREE*** questions from **modules I & II**; ***THREE*** questions from **modules III & IV**; ***FOUR*** questions from **modules V & VI**).
   All the TEN questions have to be answered.
3. **Part B**
   a. **Total marks : 18**
   b. *THREE* questions, each having **9 marks**. One question is from **module I**; one question is from **module II**; one question ***uniformly*** covers **modules I & II**
   c. *Any TWO* questions have to be answered.
   d. Each question can have ***maximum THREE*** subparts.
4. **Part C**
   a. **Total marks : 18**
   b. *THREE* questions, each having **9 marks**. One question is from **module III**; one question is from **module IV**; one question ***uniformly*** covers **modules III & IV**.
   c. *Any TWO* questions have to be answered.
   d. Each question can have ***maximum THREE*** subparts.
5. **Part D**
   a. **Total marks : 24**
   b. *THREE* questions, each having **12 marks**. One question is from **module V**; one question is from **module VI**; one question ***uniformly*** covers **modules V & VI**
   c. *Any TWO* questions have to be answered.
   d. Each question can have ***maximum THREE*** subparts.
6. There will be *AT LEAST* **50%** analytical/numerical questions in all possible combinations of question choices.

NEHRU COLLEGE OF ENGINEERING & RESEARCH CENTRE
THIRUVILWAMALA, THRISSUR-DT.

PRINCIPAL
Nehru College of
Engineering and Research Centre
Pampady, Thiruvilwamala, Thrissur Dt
Pin 680 597 Kerala

KTU Students

Course code	Course Name	L-T-P Credits	Year of Introduction
CS402	DATA MINING AND WAREHOUSING	3-0-0-3	2016

Course Objectives:

- To introduce the concepts of data Mining and its applications
- To understand investigation ofe data using practical data mining tools.
- To introduce Association Rules Mining
- To introduce advanced Data Mining techniques

Syllabus:

Data Mining, Applications, Data Mining Models, Data Warehousing and OLAP, Challenges, Tools, Data Mining Principles, Data Preprocessing: Data Preprocessing Concepts, Data Visualization, Data Sets and Their Significance, Classification Models, Multi Resolution Spatial Data Mining, Classifiers, Association Rules Mining, Cluster Analysis, Practical Data Mining Tools, Advanced Data Mining Techniques, Web Mining, Text Mining, CRM Applications and Data Mining, Data warehousing.

Expected Outcome:

The Student will be able to :

i. identify the key process of Data mining and Warehousing
ii. apply appropriate techniques to convert raw data into suitable format for practical data mining tasks
iii. analyze and compare various classification algorithms and apply in appropriate domain
iv. evaluate the performance of various classification methods using performance metrics
v. make use of the concept of association rule mining in real world scenario
vi. select appropriate clustering and algorithms for various applications
vii. extend data mining methods to the new domains of data

Text Books:

1. Dunham M H, "Data Mining: Introductory and Advanced Topics", Pearson Education, New Delhi, 2003.
2. Jaiwei Han and Micheline Kamber, "Data Mining Concepts and Techniques", Elsevier, 2006.

References:

1. M Sudeep Elayidom, "Data Mining and Warehousing", 1st Edition, 2015, Cengage Learning India Pvt. Ltd.
2. Mehmed Kantardzic, "Data Mining Concepts, Methods and Algorithms", John Wiley and Sons, USA, 2003.
3. Pang-Ning Tan and Michael Steinbach, "Introduction to Data Mining", Addison Wesley, 2006.

NEHRU COLLEGE OF ENGINEERING & RESEARCH CENTRE
THIRUVILWAMALA, THRISSUR DT

PRINCIPAL
Nehru College of
Engineering and Research Centre
Pampady, Thiruvilwamala, Thrissur Dt
Pin - 680 597, Kerala

For more study materials>www.ktustudents.in

Course Plan			
Module	**Contents**	**Hours**	**End Sem Exam . Marks**
I	Data Mining:- Concepts and Applications, Data Mining Stages, Data Mining Models, Data Warehousing (DWH) and On-Line Analytical Processing (OLAP), Need for Data Warehousing, Challenges, Application of Data Mining Principles, OLTP Vs DWH, Applications of DWH	6	15%
II	Data Preprocessing: Data Preprocessing Concepts, Data Cleaning, Data integration and transformation, Data Reduction, Discretization and concept hierarchy.	6	15%
FIRST INTERNAL EXAM			
III	Classification Models: Introduction to Classification and Prediction, Issues regarding classification and prediction, Decision Tree- ID3, C4.5, Naive Bayes Classifier.	6	15%
IV	Rule based classification- 1R. Neural Networks-Back propagation. Support Vector Machines, Lazy Learners-K Nearest Neighbor Classifier. Accuracy and error Measures-evaluation. Prediction:-Linear Regression and Non-Linear Regression.	6	15%
SECOND INTERNAL EXAM			
V	Association Rules Mining: Concepts, Apriori and FP-Growth Algorithm. Cluster Analysis: Introduction, Concepts, Types of data in cluster analysis, Categorization of clustering methods. Partitioning method: K-Means and K-Medoid Clustering.	8	20
VI	Hierarchical Clustering method: BIRCH. Density-Based Clustering –DBSCAN and OPTICS. Advanced Data Mining Techniques: Introduction, Web Mining- Web Content Mining, Web Structure Mining, Web Usage Mining. Text Mining. Graph mining:- Apriori based approach for mining frequent subgraphs. Social Network Analysis:- characteristics of social networks. Link mining:- Tasks and challenges.	8	20
END SEMESTER EXAMINATION			

NEHRU COLLEGE OF ENGINEERING & RESEARCH CENTRE
THIRUVILWAMALA, THRISSUR DT.

PRINCIPAL
Nehru College of
Engineering and Research Centre
Pampady Thiruvilwamala Thrissur Dt
Pin - 680 597 Kerala

For more study materials>www.ktustudents.in

Question Paper Pattern

1. There will be *FOUR* parts in the question paper – **A, B, C, D**
2. **Part A**
   a. **Total marks : 40**
   b. *TEN* questions, each have **4 marks**, covering **all the SIX modules** (*THREE* questions from **modules I & II**; *THREE* questions from **modules III & IV**; *FOUR* questions from **modules V & VI**).
   All the TEN questions have to be answered.
3. **Part B**
   a. **Total marks : 18**
   b. *THREE* questions, each having **9 marks**. One question is from **module I**; one question is from **module II**; one question ***uniformly*** covers **modules I & II**.
   c. *Any TWO* questions have to be answered.
   d. Each question can have ***maximum THREE*** subparts.
4. **Part C**
   a. **Total marks : 18**
   b. *THREE* questions, each having **9 marks**. One question is from **module III**; one question is from **module IV**; one question ***uniformly*** covers **modules III & IV**.
   c. *Any TWO* questions have to be answered.
   d. Each question can have ***maximum THREE*** subparts.
5. **Part D**
   a. **Total marks : 24**
   b. *THREE* questions, each having **12 marks**. One question is from **module V**; one question is from **module VI**; one question ***uniformly*** covers **modules V & VI**.
   c. *Any TWO* questions have to be answered.
   d. Each question can have ***maximum THREE*** subparts.
6. There will be *AT LEAST* **60%** analytical/numerical questions in all possible combinations of question choices.

NEHRU COLLEGE OF ENGINEERING & RESEARCH CENTRE
THIRUVILWAMALA, THRISSUR-DT.

PRINCIPAL
Nehru College of
Engineering and Research Centre
Pampady, Thiruvilwamala, Thrissur Dt
Pin 680 597 Kerala

For more study materials>www.ktustudents.in

Course code	Course Name	L-T-P Credits	Year of Introduction
CS403	PROGRAMMING PARADIGMS	3-0-0-3	2016

Course Objectives:

- To introduce the basic constructs that underlie all programming languages
- To introduce the basics of programming language design and implementation
- To introduce the organizational framework for learning new programming languages.

Syllabus:

Names, Scopes, and Bindings - Binding Time, Scope Rules, Storage Management, Overloading, Polymorphism; Control Flow - Expression Evaluation, Structured and Unstructured Flow, Non-determinacy; Data Types - Type Systems, Type Checking, Equality Testing and Assignment; Subroutines and Control Abstraction - Static and Dynamic Links, Calling Sequences, Parameter Passing, Exception Handling, Co-routines; Functional and Logic Languages; Data Abstraction and Object Orientation -Encapsulation, Inheritance, Dynamic Method Binding; Innovative features of Scripting Languages; Concurrency - Threads, Synchronization, Language-Level Mechanisms; Run-time program Management.

Expected Outcome:

The Students will be able to :

i. compare scope and binding of names in different programming languages
ii. analyze control flow structures in different programming languages
iii. appraise data types in different programming languages
iv. analyze different control abstraction mechanisms
v. appraise constructs in functional, logic and scripting languages
vi. analyze object oriented constructs in different programming languages
vii. compare different concurrency constructs
viii. interpret the concepts of run- time program management

Text book:

1. Scott M L, Programming Language Pragmatics, 3rd Edn., Morgan Kaufmann Publishers, 2009.

References:

1. David A Watt, Programming Language Design Concepts, Wiley Dreamtech, 2004
2. Ghezzi C and M. Jazayeri, Programming Language Concepts, 3rd Edn, Wiley.1997
3. Kenneth C Louden. Programming Languages: Principles and Practice, 3rd Edn., Cengage Learning, 2011.
4. Pratt T W, M V Zelkowitz, and T. V. Gopal, Programming Languages: Design and Implementation, 4th Edn., Pearson Education, 2001
5. R W Sebesta, Concepts of Programming Languages, 11th Edn., Pearson Education, 2015
6. Ravi Sethi, Programming Languages: Concepts & Constructs, 2nd Edn., Pearson Education, 2006
7. Tucker A B and R E Noonan, Programming Languages: Principles and Paradigms, 2nd Edn.McGraw Hill, 2006.

NEHRU COLLEGE OF ENGINEERING & RESEARCH CENTRE

PRINCIPAL
Nehru College of
Engineering and Research Centre
Pampady, Thiruvilwamala, Thrissur Dt

Course Plan			
Module	**Contents**	**Hours**	**End Sem. Exam Marks**
I	Names, Scopes and Bindings:- Names and Scopes, Binding Time, Scope Rules, Storage Management, Binding of Referencing Environments. Control Flow: - Expression Evaluation, Structured and Unstructured Flow, Sequencing, Selection, Iteration, Recursion, Non-determinacy.	7	15 %
II	Data Types:-Type Systems, Type Checking, Records and Variants, Arrays, Strings, Sets, Pointers and Recursive Types, Lists, Files and Input/Output, Equality Testing and Assignment.	7	15 %
FIRST INTERNAL EXAM			
III	Subroutines and Control Abstraction: - Static and Dynamic Links, Calling Sequences, Parameter Passing, Generic Subroutines and Modules, Exception Handling, Co-routines.	7	15 %
IV	Functional and Logic Languages:- Lambda Calculus, Overview of Scheme, Strictness and Lazy Evaluation, Streams and Monads, Higher-Order Functions, Logic Programming in Prolog, Limitations of Logic Programming.	7	15 %
SECOND INTERNAL EXAM			
V	Data Abstraction and Object Orientation:-Encapsulation, Inheritance, Constructors and Destructors, Aliasing, Overloading, Polymorphism, Dynamic Method Binding, Multiple Inheritance. Innovative features of Scripting Languages:-Scoping rules, String and Pattern Manipulation, Data Types, Object Orientation.	7	20 %
VI	Concurrency:- Threads, Synchronization. Run-time program Management:- Virtual Machines, Late Binding of Machine Code, Reflection, Symbolic Debugging, Performance Analysis.	7	20 %
END SEMESTER EXAM			

NEHRU COLLEGE OF ENGINEERING & RESEARCH CENTRE

PRINCIPAL
Nehru College of
Engineering and Research Centre
Pampady, Thiruvilwamala, Thrissur Dt
Pin - 680 597, Kerala

Question Paper Pattern (End semester exam)

1. There will be *FOUR* parts in the question paper – **A, B, C, D**
2. **Part A**
   a. **Total marks : 40**
   b. *TEN* questions, each have **4 marks**, covering **all the SIX modules** (*THREE* questions from **modules I & II**; *THREE* questions from **modules III & IV**; *FOUR* questions from **modules V & VI**).
   All the TEN questions have to be answered.
3. **Part B**
   a. **Total marks : 18**
   b. *THREE* questions, each having **9 marks**. One question is from **module I**; one question is from **module II**; one question ***uniformly*** covers **modules I & II**.
   c. *Any TWO* questions have to be answered.
   d. Each question can have ***maximum THREE*** subparts.
4. **Part C**
   a. **Total marks : 18**
   b. *THREE* questions, each having **9 marks**. One question is from **module III**; one question is from **module IV**; one question ***uniformly*** covers **modules III & IV**.
   c. *Any TWO* questions have to be answered.
   d. Each question can have ***maximum THREE*** subparts.
5. **Part D**
   a. **Total marks : 24**
   b. *THREE* questions, each having **12 marks**. One question is from **module V**; one question is from **module VI**; one question ***uniformly*** covers **modules V & VI**.
   c. *Any TWO* questions have to be answered.
   d. Each question can have ***maximum THREE*** subparts.
6. There will be *AT LEAST* **50%** analytical/numerical questions in all possible combinations of question choices.

NEHRU COLLEGE OF ENGINEERING & RESEARCH CENTRE
THIRUVILWAMALA, THRISSUR-DT

PRINCIPAL
Nehru College of Engineering and Research Centre
Pambady, Thiruvilwamala, Thrissur Dt
Pin 680 597 Kerala

Course code	Course Name	L-T-P -Credits	Year of Introduction
CS404	Embedded Systems	3-0-0-3	2016

Course Objectives:

- To introduce the technologies behind embedded computing systems.
- To introduce and discuss various software components involved in embedded system design and development.
- To expose students to the recent trends in embedded system design.

Syllabus:

Introduction to embedded systems, basic components, its characteristics. Modelling embedded systems. firmware development. Integration and testing of embedded systems, development environment. Characteristics of RTOS, interrupt handling, creating tasks in a typical RTOS. Embedded product development life cycle.

Expected Outcome:

The Student will be able to :

i. demonstrate the role of individual components involved in a typical embedded system
ii. analyze the characteristics of different computing elements and select the most appropriate one for an embedded system
iii. model the operation of a given embedded system
iv. substantiate the role of different software modules in the development of an embedded system
v. develop simple tasks to run on an RTOS
vi. examine the latest trends prevalent in embedded system design

References:

1. J Staunstrup and Wayne Wolf, Hardware / Software Co-Design: Principles and Practice, Prentice Hall.
2. Jean J. Labrose, Micro C/OS II: The Real Time Kernel, 2e, CRC Press, 2002.
3. Raj Kamal, Embedded Systems: Architecture, Programming and Design, Third Edition, McGraw Hill Education (India), 2014.
4. Shibu K.V., Introduction to Embedded Systems, McGraw Hill Education (India), 2009.
5. Steave Heath, Embedded System Design, Second Edition, Elsevier.
6. Wayne Wolf , Computers as Components-Principles of Embedded Computer System Design, Morgan Kaufmann publishers, Third edition, 2012.

Course Plan

Module	Contents	Hours	End Sem. Exam Marks
I	Fundamentals of Embedded Systems- complex systems and microprocessors- Embedded system design process .Specifications- architecture design of embedded system- design of hardware and software components- structural and behavioural description.	6	15%
II	Hardware Software Co-Design and Program Modelling – Fundamental Issues, Computational Models- Data Flow Graph, Control Data Flow Graph, State Machine,. Sequential Model, Concurrent Model, Object oriented model, UML	9	15%

NEHRU COLLEGE OF ENGINEERING & RESEARCH CENTRE
PRINCIPAL
Nehru College of Engineering and Research Centre

For more study materials>www.ktustudents.in

FIRST INTERNAL EXAMINATION			
III	Design and Development of Embedded Product – Firmware Design and Development – Design Approaches, Firmware Development Languages.	6	15%
IV	Integration and Testing of Embedded Hardware and Firmware- Integration of Hardware and Firmware. Embedded System Development Environment – IDEs, Cross Compilers, Disassemblers. Decompilers, Simulators, Emulators and Debuggers.	6	15%
SECOND INTERNAL EXAMINATION			
V	RTOS based Design – Basic operating system services. Interrupt handling in RTOS environment. Design Principles. Task scheduling models. How to Choose an RTOS. Case Study – MicroC/OS-II.	9	20%
VI	Networks – Distributed Embedded Architectures, Networks for embedded systems. Network based design, Internet enabled systems. Embedded Product Development Life Cycle – Description – Objectives -Phases – Approaches1. Recent Trends in Embedded Computing.	6	20%
END SEMESTER EXAM			

Question Paper Pattern

1. There will be ***FOUR*** parts in the question paper – **A, B, C, D**
2. **Part A**
   a. **Total marks : 40**
   b. *TEN* questions, each have **4 marks**, covering **all the SIX modules** (***THREE*** questions from **modules I & II**; ***THREE*** questions from **modules III & IV**; ***FOUR*** questions from **modules V & VI**). ***All*** questions have to be answered.
3. **Part B**
   a. **Total marks : 18**
   b. *THREE* questions, each having **9 marks**. One question is from **module I**; one question is from **module II**; one question ***uniformly*** covers **modules I & II**.
   c. *Any TWO* questions have to be answered.
   d. Each question can have ***maximum THREE*** subparts.
4. **Part C**
   a. **Total marks : 18**
   b. *THREE* questions, each having **9 marks**. One question is from **module III**; one question is from **module IV**; one question ***uniformly*** covers **modules III & IV**.
   c. *Any TWO* questions have to be answered.
   d. Each question can have ***maximum THREE*** subparts.
5. **Part D**
   a. **Total marks : 24**
   b. *THREE* questions, each having **12 marks**. One question is from **module V**; one question is from **module VI**; one question ***uniformly*** covers **modules V & VI**.
   c. *Any TWO* questions have to be answered.
   d. Each question can have ***maximum THREE*** subparts.
6. There will be *AT LEAST* **50%** analytical/numerical questions in all possible combinations of question choices.

NEHRU COLLEGE OF ENGINEERING & RESEARCH CENTRE
PRINCIPAL
Nehru College of Engineering and Research Centre
Pampady Thiruvilwamala Thrissur Dt
Pin 680 597

For more study materials>www.ktustudents.in

Course code	Course Name	L-T-P -Credits	Year of Introduction
CS405	COMPUTER SYSTEM ARCHITECTURE	3-0-0-3	2016

Course Objectives:

- To impart a basic understanding of the parallel architecture and its operations
- To introduce the key features of high performance computers

Syllabus:

Basic concepts of parallel computer models, SIMD computers, Multiprocessors and multi-computers, Cache Coherence Protocols, Multicomputers, Pipelining computers and Multithreading.

Expected outcome :

The Students will be able to :

i. summarize different parallel computer models
ii. analyze the advanced processor technologies
iii. interpret memory hierarchy
iv. compare different multiprocessor system interconnecting mechanisms
v. interpret the mechanisms for enforcing cache coherence
vi. analyze different message passing mechanisms
vii. analyze different pipe lining techniques
viii. appraise concepts of multithreaded and data flow architectures

Text Book:

- K. Hwang and Naresh Jotwani, Advanced Computer Architecture, Parallelism, Scalability, Programmability, TMH, 2010.

References:

1. H P Hayes, Computer Architecture and Organization, McGraw Hill, 1978.
2. K. Hwang & Briggs , Computer Architecture and Parallel Processing, McGraw Hill International, 1986
3. M J Flynn, Computer Architecture: Pipelined and Parallel Processor Design, Narosa Publishing House, 2012.
4. M Sasikumar, D Shikkare and P Raviprakash, Introduction to Parallel Processing, PHI, 2014.
5. P M Kogge, The Architecture of Pipelined Computer, McGraw Hill, 1981.
6. P V S Rao , Computer System Architecture, PHI, 2009.
7. Patterson D. A. and Hennessy J. L., Morgan Kaufmann , Computer Organization and Design: The Hardware/Software Interface, Morgan Kaufmann Pub, 4/e, 2010.

NEHRU COLLEGE OF ENGINEERING & RESEARCH CENTRE

PRINCIPAL
Nehru College of
Engineering and Research Centre
Pampady, Thiruvilwamala, Thrissur Dt
Pin - 680 597, Kerala

Course Plan			
Module	**Contents**	**Hours**	**End Sem. Exam Marks**
I	Parallel computer models – Evolution of Computer Architecture, System Attributes to performance, Amdahl's law for a fixed workload. Multiprocessors and Multicomputers, Multivector and SIMD computers, Architectural development tracks, Conditions of parallelism.	6	15%
II	Processors and memory hierarchy – Advanced processor technology- Design Space of processors, Instruction Set Architectures, CISC Scalar Processors, RISC Scalar Processors, Superscalar and vector processors, Memory hierarchy technology.	8	15%
FIRST INTERNAL EXAM			
III	Multiprocessors system interconnects - Hierarchical bus systems, Cross bar switch and multiport memory, Multistage and combining networks. Cache Coherence and Synchronization Mechanisms, Cache Coherence Problem, Snoopy Bus Protocol, Directory Based Protocol, Hardware Synchronization Problem	7	15%
IV	Message Passing Mechanisms-Message Routing schemes, Flow control Strategies, Multicast Routing Algorithms. Pipelining and Superscalar techniques – Linear Pipeline processors and Nonlinear pipeline processors	8	15%
SECOND INTERNAL EXAM			
V	Instruction pipeline design, Arithmetic pipeline deign - Super Scalar Pipeline Design	8	20%
VI	Multithreaded and data flow architectures - Latency hiding techniques, Principles of multithreading - Multithreading Issues and Solutions, Multiple context Processors, Fine-grain Multicomputer- Fine-grain Parallelism. Dataflow and hybrid architecture	8	20%
END SEMESTER EXAM			

NEHRU COLLEGE OF ENGINEERING & RESEARCH CENTRE
Pampady, Thiruvilwamala, Thrissur

PRINCIPAL
Nehru College of
Engineering and Research Centre
Pampady, Thiruvilwamala, Thrissur
Pin 680 597 Kerala

Question Paper Pattern (**End semester exam**)

1. There will be *FOUR* parts in the question paper – **A, B, C, D**
2. **Part A**
   a. **Total marks : 40**
   b. *TEN* questions, each have **4 marks, covering all the SIX modules** (*THREE* questions from **modules I & II**; *THREE* questions from **modules III & IV**; *FOUR* questions from **modules V & VI**).
   All the TEN questions have to be answered.
3. **Part B**
   a. **Total marks : 18**
   b. *THREE* questions, each having **9 marks**. One question is from **module I**; one question is from **module II**; one question ***uniformly*** covers **modules I & II**.
   c. *Any TWO* questions have to be answered.
   d. Each question can have ***maximum THREE*** subparts.
4. **Part C**
   a. **Total marks : 18**
   b. *THREE* questions, each having **9 marks**. One question is from **module III**; one question is from **module IV**; one question ***uniformly*** covers **modules III & IV**.
   c. *Any TWO* questions have to be answered.
   d. Each question can have ***maximum THREE*** subparts.
5. **Part D**
   a. **Total marks : 24**
   b. *THREE* questions, each having **12 marks**. One question is from **module V**; one question is from **module VI**; one question ***uniformly*** covers **modules V & VI**.
   c. *Any TWO* questions have to be answered.
   d. Each question can have ***maximum THREE*** subparts.
6. There will be *AT LEAST* 60% analytical/numerical questions in all possible combinations of question choices.

NEHRU COLLEGE OF ENGINEERING & RESEARCH CENTRE
Pampady
THIRUVILWAMALA
THRISSUR-Dt

PRINCIPAL
Nehru College of
Engineering and Research Centre
Pampady, Thiruvilwamala, Thrissur Dt
Pin - 680 597, Kerala

Course code	Course Name	L-T-P – Credits	Year of Introduction
CS407	DISTRIBUTED COMPUTING	3-0-0-3	2016

Course Objectives:

- To introduce fundamental principles of distributed systems, technical challenges and key design issues.
- To impart knowledge of the distributed computing models, algorithms and the design of distributed system.

Syllabus:

Introduction to distributed computing, Design issues, Distributed Computing Models, System models, Inter-process communication, Distributed file system, Name Service , Distributed mutual exclusion , Distributed system design.

Expected Outcome

The Students will be able to :

i. distinguish distributed computing paradigm from other computing paradigms
ii. identify the core concepts of distributed systems
iii. illustrate the mechanisms of inter process communication in distributed system
iv. apply appropriate distributed system principles in ensuring transparency, consistency and fault-tolerance in distributed file system
v. compare the concurrency control mechanisms in distributed transactional environment
vi. outline the need for mutual exclusion and election algorithms in distributed systems

Text Books:

1. George Coulouris, Jean Dollimore and Tim Kindberg , Distributed Systems: Concepts and Design, Fifth Edition , Pearson Education, 2011
2. Pradeep K Sinha, Distributed Operating Systems : Concepts and Design, Prentice Hall of India

References:

1. A S Tanenbaum and M V Steen , Distributed Systems: Principles and paradigms, Pearson Education, 2007
2. M Solomon and J Krammer, Distributed Systems and Computer Networks, PHI

Course Plan

Module	Contents	Hours	End Sem. Exam Marks
I	Evolution of Distributed Computing -Issues in designing a distributed system- Challenges- Minicomputer model – Workstation model - Workstation-Server model– Processor - pool model - Trends in distributed systems	7	15%
II	System models: Physical models - Architectural models - Fundamental models	6	15%

NEHRU COLLEGE OF ENGINEERING & RESEARCH CENTRE
PAMPADY THIRUVILWAMALA THRISSUR-DT

PRINCIPAL
Nehru College of
Engineering and Research Centre
Pampady, Thiruvilwamala, Thrissur Dt
Pin

FIRST INTERNAL EXAM			
III	Interprocess communication: characteristics – group communication - Multicast Communication –Remote Procedure call - Network virtualization. Case study : Skype	7	15%
IV	Distributed file system: File service architecture - Network file system- Andrew file system- Name Service	7	15%
SECOND INTERNAL EXAM			
V	Transactional concurrency control:- Transactions, Nested transactions-Locks-Optimistic concurrency control	7	20%
VI	Distributed mutual exclusion – central server algorithm – ring based algorithm- Maekawa's voting algorithm – Election: Ring -based election algorithm – Bully algorithm	7	20%
END SEMESTER EXAM			

Question Paper Pattern

1. There will be *FOUR* parts in the question paper – **A, B, C, D**
2. **Part A**
   a. **Total marks : 40**
   b. *TEN* questions, each have **4 marks**, covering **all the SIX modules** (*THREE* questions from **modules I & II**; *THREE* questions from **modules III & IV**; *FOUR* questions from **modules V & VI**).
   All the TEN questions have to be answered.
3. **Part B**
   a. **Total marks : 18**
   b. *THREE* questions, each having **9 marks**. One question is from **module I**; one question is from **module II**; one question ***uniformly*** covers **modules I & II**.
   c. *Any TWO* questions have to be answered.
   d. Each question can have ***maximum THREE*** subparts.
4. **Part C**
   a. **Total marks : 18**
   b. *THREE* questions, each having **9 marks**. One question is from **module III**; one question is from **module IV**; one question ***uniformly*** covers **modules III & IV**.
   c. *Any TWO* questions have to be answered.
   d. Each question can have ***maximum THREE*** subparts.
5. **Part D**
   a. **Total marks : 24**
   b. *THREE* questions, each having **12 marks**. One question is from **module V**; one question is from **module VI**; one question ***uniformly*** covers **modules V & VI**.
   c. *Any TWO* questions have to be answered.
   d. Each question can have ***maximum THREE*** subparts.
6. There will be *AT LEAST* 50% analytical/numerical questions in all possible combinations of question choices.

PRINCIPAL
Nehru College of
Engineering and Research Centre
Pampady, Thiruvilwamala

III	Public key Cryptography: - Principles of Public key Cryptography Systems, Number theory- Fundamental Theorem of arithmetic, Fermat's Theorem, Euler's Theorem, Euler's Totient Function, Extended Euclid's Algorithm, Modular arithmetic. RSA algorithm-Key Management - Diffie-Hellman Key Exchange, Elliptic curve cryptography	7	15 %
IV	Authentication requirements- Authentication functions- Message authentication codes- Hash functions- SHA -1, MD5, Security of Hash functions and MACs- Authentication protocols-Digital signatures-Digital signature standards.	7	15 %
SECOND INTERNAL EXAM			
V	Network security: Electronic Mail Security: Pretty good privacy-S/MIME. IP Security: Architecture- authentication Header-Encapsulating Security payload- Combining Security associations-Key management.	7	20 %
VI	Web Security: Web Security considerations- secure Socket Layer and Transport layer Security- Secure electronic transaction. Firewalls-Packet filters- Application Level Gateway- Encrypted tunnels.	7	20 %
END SEMESTER EXAM			

Question Paper Pattern (End semester exam)

1. There will be *FOUR* parts in the question paper – **A, B, C, D**
2. **Part A**
   a. **Total marks : 40**
   b. *TEN* questions, each have **4 marks**, covering **all the SIX modules** (*THREE* questions from **modules I & II**; *THREE* questions from **modules III & IV**; *FOUR* questions from **modules V & VI**). *All* questions have to be answered.
3. **Part B**
   a. **Total marks : 18**
   b. *THREE* questions, each having **9 marks**. One question is from **module I**; one question is from **module II**; one question ***uniformly*** covers **modules I & II**.
   c. *Any TWO* questions have to be answered.
   d. Each question can have ***maximum THREE*** subparts.
4. **Part C**
   a. **Total marks : 18**
   b. *THREE* questions, each having **9 marks**. One question is from **module III**; one question is from **module IV**; one question ***uniformly*** covers **modules III & IV**.
   c. *Any TWO* questions have to be answered.
   d. Each question can have ***maximum THREE*** subparts.
5. **Part D**
   a. **Total marks : 24**
   b. *THREE* questions, each having **12 marks**. One question is from **module V**; one question is from **module VI**; one question ***uniformly*** covers **modules V & VI**.
   c. *Any TWO* questions have to be answered.
   d. Each question can have ***maximum THREE*** subparts.
6. There will be *AT LEAST* **60%** analytical/numerical questions in all possible combinations of question choices.

PRINCIPAL
Nehru College of
Engineering and Research Centre
Pampady, Thiruvilwamala

KTU STUDENTS

Course code	Course Name	L-T-P - Credits	Year of Introduction
CS464	ARTIFICIAL INTELLIGENCE	3-0-0-3	2016

Course Objectives:

- To introduce basic principles that drive complex real world intelligence applications.
- To introduce and discuss the basic concepts of AI Techniques and Learning

Syllabus:

Introduction to AI. Solving Problems by Searching-uninformed, informed, heuristic, constraint Satisfaction problems -AI Representational Schemes-Learning-Advanced searches-Alpha beta pruning, Expert Systems-Natural Language Processing Concepts.

Expected Outcome:

The Student will be able to :

i. appreciate the scope and limits of the artificial intelligence (AI) field
ii. assess the applicability, strengths, and weaknesses of the basic knowledge representation
iii. interpret the role of knowledge representation, problem solving, and learning
iv. explain various search algorithms (uninformed, informed, and heuristic) for problem solving
v. comprehend the fundamentals of Natural Language Processing

Text Books:

1. E Rich. K Knight. Artificial Intelligence, 3/e, Tata McGraw Hil, 2009.
2. George.F.Luger, Artificial Intelligence- Structures and Strategies for Complex Problem Solving, 4/e. Pearson Education. 2002.

References:

1. D. Poole and A. Mackworth. Artificial Intelligence: Foundations of Computational Agents. Cambridge University Press, 2010 Available online: *http://artint.info/*
2. Dan W Patterson, Introduction to Artificial Intelligence,Pearson,2009
3. Deepak Khemeni,A First course in Artificial Intelligence,Tata McGraw Hill,2013
4. Maja J. Mataric .Robotics Primer,MIT press,2007
5. Patrick Henry Winston,Artificial intelligence,Addisson wessley,1992
6. Stefan Edelkamp, Stefan Schroedl, Heuristic Search: Theory and Applications, Morgan Kaufman, 2011.
7. Stuart Jonathan Russell. Peter Norvig, Artificial intelligence, A modern approach,3rd edition. pearson,2010

NEHRU COLLEGE OF ENGINEERING & RESEARCH CENTRE THIRUVILWAMALA THRISSUR DT

PRINCIPAL
Nehru College of
Engineering and Research Centre
Pampady Thiruvilwamala, Thrissur Dt
Pin - 680 597 Kerala

For more study materials>www.ktustudents.in

Course Plan			
Module	**Contents**	**Hours**	**End Sem. Exam Marks**
I	**Introduction**: What is AI, The foundations of AI, History and applications, Production systems. Structures and strategies for state space search. Informed and Uninformed searches.	5	15%
II	**Search Methods**: data driven and goal driven search. Depth first and breadth first search, DFS with iterative deepening. Heuristic search-best first search, A * algorithm.AO* algorithm, Constraint Satisfaction. Crypt Arithmetic Problems	8	15%
FIRST INTERNAL EXAMINATION			
III	**AI representational schemes-** Semantic nets, conceptual dependency, scripts, frames, introduction to agent based problem solving, Machine learning-symbol based-a frame work for symbol based learning.	6	15%
IV	**Advanced Search:** Heuristics in Games, Design of good heuristic-an example. Min-Max Search Procedure, Alpha Beta pruning.	6	15%
SECOND INTERNAL EXAMINATION			
V	**Learning Concepts:** Version space search. Back propagation learning. Social and emergent models of learning-genetic algorithm, classifier systems and genetic programming.	9	20%
VI	**Expert Systems**: rule based expert systems. Natural language processing-natural language understanding problem, deconstructing language. Syntax stochastic tools for language analysis, natural language applications	9	20%
END SEMESTER EXAM			

Question Paper Pattern (End semester exam)

1. There will be *FOUR* parts in the question paper – **A, B, C, D**
2. **Part A**
   a. **Total marks : 40**
   b. *TEN* questions, each have **4 marks**, covering **all the SIX modules** (*THREE* questions from **modules I & II**; *THREE* questions from **modules III & IV**; *FOUR* questions from **modules V & VI**).
   All the TEN questions have to be answered.

NEHRU COLLEGE OF ENGINEERING & RESEARCH CENTRE
Pampady
THIRUVILWAMALA
THRISSUR-DT.

PRINCIPAL
Nehru College of
Engineering and Research Centre
Pampady Thiruvilwamala, Thrissur (Dt)
Pin - 680 597 Kerala

For more study materials>www.ktustudents.in

3. **Part B**
   a. **Total marks : 18**
   b. *THREE* questions, each having **9 marks**. One question is from **module I**; one question is from **module II**; one question ***uniformly*** covers **modules I & II**
   c. *Any TWO* questions have to be answered.
   d. Each question can have ***maximum THREE*** subparts.
4. **Part C**
   a. **Total marks : 18**
   b. *THREE* questions, each having **9 marks**. One question is from **module III**; one question is from **module IV**; one question ***uniformly*** covers **modules III & IV**.
   c. *Any TWO* questions have to be answered.
   d. Each question can have ***maximum THREE*** subparts.
5. **Part D**
   a. **Total marks : 24**
   b. *THREE* questions, each having **12 marks**. One question is from **module V**; one question is from **module VI**; one question ***uniformly*** covers **modules V & VI**.
   c. *Any TWO* questions have to be answered.
   d. Each question can have ***maximum THREE*** subparts.
6. There will be *AT LEAST* **60%** analytical/numerical questions in all possible combinations of question choices.

NEHRU COLLEGE OF ENGINEERING & RESEARCH CENTRE
THIRUVILWAMALA, THRISSUR

PRINCIPAL
Nehru College of
Engineering and Research Centre
Pampady, Thiruvilwamala, Thrissur Dt
Pin 680 597 Kerala

For more study materials>www.ktustudents.in

Course code	Course Name	L-T-P Credits	Year of Introduction
CS465	BIOINFORMATICS	3-0-0-3	2016

Course Objectives:

- To introduce concepts and data representations in bioinformatics
- To introduce fundamentals of Sequence alignment and Gene Recognition
- To discuss predictive methods using DNA and Protein Sequences

Syllabus:

Introduction to bioinformatics and molecular biology: Databases tools and their uses, Data searches and Pairwise Alignments, Multiple Sequence Alignments, Molecular Phylogenetic, Genomics and Gene Recognition, Protein and RNA structure Prediction

Expected Outcome:

The Students will be able to :

i. interpret the concepts of bioinformatics
ii. identify different types of biological sequence
iii. analyse multiple sequences and find conserved regions
iv. predict RNA and Protein secondary structures
v. analyse genomic sequences and identify encoded gene regions

References:

1. S C Rastogi, N Mendiratta and P Rastogi, " Bioinformatics: Methods and Applications" , ISBN : 978-81-203-4785-4, published by PHI Learning Private Limited, New Delhi, 2015.
2. D E Krane and M L Raymer, Fundamental Concepts of Bioinformatics, ISBN 978-81-7758-757-9, Pearson Education, 2006.
3. Andreas D.Baxevanis, B F Francis Ouellette, "Bioinformatics - A Practical Guide to the Analysis of Genes and Proteins", Third Edition, 2005-2006, ISBN: 978-81-265-2192-0, published by John Wiley & Sons INC. , U.K.
4. Neil C Jones and Pavel A Pevzner. An Introduction to Bioinformatics Algorithms, MIT press, 2004.

Course Plan

Module	Contents	Hours	End Sem. Exam Marks
I	Bioinformatics and Computational Biology, Nature & Scope of Bioinformatics. The central dogma of molecular biology and bio-sequences associated with it, RNA classification –coding and non coding RNA- mRNA, tRNA, miRNA and sRNA, RNAi. DNA and RNA structure – Nucleic Acid structure and function, Genetic Code, Genes and Evolution	6	15%
II	Importance of databases - Biological databases-primary sequence databases, Composite sequence databases- Secondary databases- nucleic acid sequence databases - Protein sequence data bases - structure databases, Types of databases, Data retrieval tools - Entrez	8	15%

NEHRU COLLEGE OF ENGINEERING & RESEARCH CENTRE
THIRUVILWAMALA, THRISSUR DT.

PRINCIPAL
Nehru College of
Engineering and Research Centre
Pampady, Thiruvilwamala, Thrissur
Pin 680 597 Kerala

FIRST INTERNAL EXAM			
III	Sequence alignment – local/global, pairwise sequence alignment, scoring methods. Needleman and Wunsch algorithm, global and local alignments. Multiple sequence alignment. Scoring matrices: basic concept of a scoring matrix, Matrices for nucleic acid and proteins sequences, PAM and BLOSUM series, principles based on which these matrices are derived. Differences between distance & similarity matrix.	8	20%
IV	Introduction. Advantages, Phylogenetic Trees, Tree topologies, Methods for phylogenetic analysis- Distance Matrix methods, Character based methods. HMM (Hidden Markov Model): Introduction to HMM, Forward algorithm, Viterbi algorithm, applications in Bioinformatics	6	15%
SECOND INTERNAL EXAM			
V	General introduction to Gene expression in prokaryotes and eukaryotes- Prokaryotic Genomes – Gene structure, GC content, Gene Density, Eukaryotic Genomes- Gene structure, GC content, Gene Density, Gene Expression, Transposition, Gene prediction approaches.	8	20%
VI	Protein and RNA structure Prediction: Predicting RNA secondary structure - Nussinov Algorithm, Energy minimisation methods - Zuker Algorithm. Amino Acids, Polypeptide Composition, Protein Structures, Algorithm for protein folding, Structure prediction	6	15%
END SEMESTER EXAM			

Question Paper Pattern (End semester exam)

1. There will be *FOUR* parts in the question paper – **A, B, C, D**
2. **Part A**
   a. **Total marks : 40**
   b. *TEN* questions, each have **4 marks**, covering **all the SIX modules** (*THREE* questions from **modules I & II**; *THREE* questions from **modules III & IV**; *FOUR* questions from **modules V & VI**).
   All the TEN questions have to be answered.
3. **Part B**
   a. **Total marks : 18**
   b. *THREE* questions, each having **9 marks.** One question is from **module I**; one question is from **module II**; one question ***uniformly*** covers **modules I & II**.
   Any TWO questions have to be answered.
   Each question can have ***maximum THREE*** subparts.
4. **Part C**
   a. **Total marks : 18**

NEHRU COLLEGE OF ENGINEERING & RESEARCH CENTRE THIRUVILWAMALA THRISSUR-DT.

PRINCIPAL
Nehru College of
Engineering and Research Centre
Pampady, Thiruvilwamala, Thrissur

b. *THREE* questions, each having **9 marks.** One question is from **module III**; one question is from **module IV**; one question ***uniformly*** covers **modules III & IV.**
c. *Any TWO* questions have to be answered.
d. Each question can have ***maximum THREE*** subparts.

5. **Part D**
   a. **Total marks : 24**
   b. *THREE* questions, each having **12 marks.** One question is from **module V**; one question is from **module VI**; one question ***uniformly*** covers **modules V & VI.**
   c. *Any TWO* questions have to be answered.
   d. Each question can have ***maximum THREE*** subparts.
6. There will be *AT LEAST* 60% analytical/numerical questions in all possible combinations of question choices.

NEHRU COLLEGE OF ENGINEERING & RESEARCH CENTRE
PAMPADY, THIRUVILWAMALA, THRISSUR DT.

PRINCIPAL
Nehru College of
Engineering and Research Centre
Pampady, Thiruvilwamala, Thrissur Dt
Pin 680 597 Kerala

Course code	Course Name	L-T-P Credits	Year of Introduction
CS467	MACHINE LEARNING	3-0-0-3	2016

Course Objectives:

- To introduce the prominent methods for machine learning
- To study the basics of supervised and unsupervised learning
- To study the basics of connectionist and other architectures

Syllabus:

Introduction to Machine Learning, Learning in Artificial Neural Networks, Decision trees, HMM, SVM, and other Supervised and Unsupervised learning methods.

Expected Outcome:

The Students will be able to :

i. differentiate various learning approaches, and to interpret the concepts of supervised learning
ii. compare the different dimensionality reduction techniques
iii. apply theoretical foundations of decision trees to identify best split and Bayesian classifier to label data points
iv. illustrate the working of classifier models like SVM, Neural Networks and identify classifier model for typical machine learning applications
v. identify the state sequence and evaluate a sequence emission probability from a given HMM
vi. illustrate and apply clustering algorithms and identify its applicability in real life problems

References:

1. Christopher M. Bishop, *Pattern Recognition and Machine Learning*, Springer, 2006.
2. Ethem Alpaydın, *Introduction to Machine Learning* (Adaptive Computation and Machine Learning), MIT Press, 2004.
3. Margaret H. Dunham. Data Mining: introductory and Advanced Topics, Pearson, 2006
4. Mitchell. T, *Machine Learning*, McGraw Hill.
5. Ryszard S. Michalski, Jaime G. Carbonell, and Tom M. Mitchell, *Machine Learning : An Artificial Intelligence Approach*, Tioga Publishing Company.

Course Plan

Module	Contents	Hours	End Sem. Exam Marks %
I	Introduction to Machine Learning, Examples of Machine Learning applications - Learning associations, Classification, Regression, Unsupervised Learning, Reinforcement Learning. Supervised learning- Input representation, Hypothesis class, Version space, Vapnik-Chervonenkis (VC) Dimension	6	15

NEHRU COLLEGE OF ENGINEERING & RESEARCH CENTRE
PAMPADY
THIRUVILWAMALA
THRISSUR DT

PRINCIPAL
Nehru College of
Engineering and Research Centre
Pampady, Thiruvilwamala, Thrissur Dt
Pin 680 597

II	Probably Approximately Learning (PAC), Noise, Learning Multiple classes. Model Selection and Generalization, Dimensionality reduction- Subset selection, Principle Component Analysis	8	15
FIRST INTERNAL EXAM			
III	Classification- Cross validation and re-sampling methods- K-fold cross validation, Boot strapping, Measuring classifier performance- Precision, recall, ROC curves. Bayes Theorem, Bayesian classifier, Maximum Likelihood estimation, Density functions, Regression	8	20
IV	Decision Trees- Entropy, Information Gain, Tree construction, ID3, Issues in Decision Tree learning- Avoiding Over-fitting, Reduced Error Pruning, The problem of Missing Attributes, Gain Ratio, Classification by Regression (CART), Neural Networks- The Perceptron, Activation Functions, Training Feed Forward Network by Back Propagation.	6	15
SECOND INTERNAL EXAM			
V	Kernel Machines- Support Vector Machine- Optimal Separating hyper plane, Soft-margin hyperplane, Kernel trick, Kernel functions. Discrete Markov Processes, Hidden Markov models, Three basic problems of HMMs- Evaluation problem, finding state sequence, Learning model parameters. Combining multiple learners, Ways to achieve diversity, Model combination schemes, Voting, Bagging, Booting	8	20
VI	Unsupervised Learning - Clustering Methods - K-means, Expectation-Maximization Algorithm, Hierarchical Clustering Methods . Density based clustering	6	15
END SEMESTER EXAM			

Question Paper Pattern

1. There will be *FOUR* parts in the question paper – **A, B, C, D**
2. **Part A**
   a. **Total marks : 40**
   b. *TEN* questions, each have **4 marks**, covering **all the SIX modules** (*THREE* questions from **modules I & II**; *THREE* questions from **modules III & IV**; *FOUR* questions from **modules V & VI**).
   All the TEN questions have to be answered.
3. **Part B**
   a. **Total marks : 18**
   b. *THREE* questions, each having **9 marks**. One question is from **module I**; one question is from **module II**; one question ***uniformly*** covers **modules I & II**.
   Any TWO questions have to be answered.
   Each question can have ***maximum THREE*** subparts.

PRINCIPAL
Nehru College of
Engineering and Research Centre
Pampady

4. **Part C**
    a. **Total marks : 18**
    b. *THREE* questions, each having **9 marks**. One question is from **module III**; one question is from **module IV**; one question ***uniformly*** covers **modules III & IV**.
    c. ***Any TWO*** questions have to be answered.
    d. Each question can have ***maximum THREE*** subparts.
5. **Part D**
    a. **Total marks : 24**
    b. *THREE* questions, each having **12 marks**. One question is from **module V**; one question is from **module VI**; one question ***uniformly*** covers **modules V & VI**.
    c. ***Any TWO*** questions have to be answered.
    d. Each question can have ***maximum THREE*** subparts.
6. There will be *AT LEAST* **60%** analytical/numerical questions in all possible combinations of question choices.

NEHRU COLLEGE OF ENGINEERING & RESEARCH CENTRE

PRINCIPAL
Nehru College of
Engineering and Research Centre
Pampady, Thiruvilwamala, Thrissur Dt

Course code	Course Name	L-T-P -Credits	Year of Introduction
CS468	CLOUD COMPUTING	3-0-0-3	2016

Course Objectives:

- To impart the fundamentals of virtualization techniques.
- To introduce concepts and security issues of cloud paradigm.
- To introduce cloud computing based programming techniques and cloud services.

Syllabus:

Introduction to Virtualization – Introduction to Cloud Computing , Cloud Architecture and Resource Management ,Cloud Programming ,Security in the Cloud , Using Cloud Services.

Expected Outcome:

The Student will be able to :

i. identify the significance of implementing virtualization techniques.
ii. interpret the various cloud computing models and services
iii. compare the various public cloud platforms and software environments.
iv. apply appropriate cloud programming methods to solve big data problems.
v. appreciate the need of security mechanisms in cloud
vi. illustrate the use of various cloud services available online.

Text Book:

- Kai Hwang , Geoffrey C Fox, Jack J Dongarra : "Distributed and Cloud Computing – From Parallel Processing to the Internet of Things" , Morgan Kaufmann Publishers – 2012.

References:

1. Alex Amies, Harm Sluiman, Qiang Guo Tong and Guo Ning Liu: Developing and Hosting Applications on the cloud, IBM Press, 2012.
2. George Reese, "Cloud Application Architectures: Building Applications and Infrastructure in the Cloud (Theory in Practice)", O'Reilly Publications, 2009.
3. Haley Beard, "Cloud Computing Best Practices for Managing and Measuring Processes for On-demand Computing – applications and Data Centers in the Cloud with SLAs", Emereo Pty Limited, July 2008
4. James E. Smith and Ravi Nair: Virtual Machines: Versatile Platforms for Systems and Processes, Morgan Kaufmann. ELSEVIER Publication, 2006.
5. John W Rittinghouse and James F Ransome , "Cloud Computing: Implementation – Management – and Security", CRC Press, 2010.
6. Michael Miller, "Cloud Computing: Web-Based Applications That Change the Way You Work and Collaborate Online", Pearson Education, 2009.
7. Richard N. Katz, "The Tower and The Cloud", Higher Education in the Age of Cloud Computing, 2008.
8. Toby Velte, Anthony Velte and Robert Elsenpeter: "Cloud Computing – A Practical Approach". TMH. 2009.

PRINCIPAL
Nehru College of
Engineering and Research Centre
Pampady, Thiruvilwamala, Thrissur Dt
Pin - 680 597, Kerala

For more study materials>www.ktustudents.in

Course Plan			
Module	**Contents**	**Hours**	**End Sem. Exam Marks**
I	**INTRODUCTION TO VIRTUALIZATION** Virtual Machines and Virtualization Middleware – Data Center Virtualization for Cloud Computing – Implementation Levels of Virtualization – Virtualization Structures/Tools and Mechanisms – Virtualization of CPU – Memory – I/O Devices	7	15%
II	**INTRODUCTION TO CLOUD COMPUTING** System Models for Distributed and Cloud Computing – Software Environments for Distributed Systems and Clouds – Cloud Computing and Service Models – Public – Private – Hybrid Clouds – Infrastructure-as-a-Service (IaaS) – Platform-as-a-Service (PaaS) - Software-as-a-Service (SaaS)-Different Service Providers	8	15%
FIRST INTERNAL EXAMINATION			
III	**CLOUD ARCHITECTURE AND RESOURCE MANAGEMENT** Architectural Design of Compute and Storage Clouds – Public Cloud Platforms: GAE – AWS – Azure- Emerging Cloud Software Environments – Eucalyptus- Nimbus – Open Stack – Extended Cloud Computing Services – Resource Provisioning and Platform Deployment – Virtual Machine Creation and Management.	8	15%
IV	**CLOUD PROGRAMMING** Parallel Computing and Programming Paradigms – Map Reduce – Twister – Iterative Map Reduce – Hadoop Library from Apache – Pig Latin High Level Languages- Mapping Applications to Parallel and Distributed Systems – Programming the Google App Engine – Google File System (GFS) – Big Table – Google's NOSQL System	7	15%
SECOND INTERNAL EXAMINATION			
V	**SECURITY IN THE CLOUD** Security Overview – Cloud Security Challenges – Security -as-a-Service – Security Governance – Risk Management – Security Monitoring – Security Architecture Design – Data Security – Application Security – Virtual Machine Security.	6	20%
VI	**USING CLOUD SERVICES :** Email Communications – Collaborating on To-Do Lists –Contact Lists – Cloud Computing for the Community- Collaborating on Calendars – Schedules and Task Management – Exploring Online Scheduling Applications – Exploring Online Planning and Task Management – Collaborating on Event Management – Project Management -Word Processing – Databases .	6	20%
END SEMESTER EXAM			

PRINCIPAL
Nehru College of
Engineering and Research Centre
Pampady Thiruvilwamala, Thrissur Dt
Pin 680 597 Kerala

For more study materials>www.ktustudents.in

Question Paper Pattern

1. There will be *FOUR* parts in the question paper – **A, B, C, D**
2. **Part A**
   a. **Total marks : 40**
   b. *TEN* questions, each have **4 marks, covering all the SIX modules** (***THREE*** questions from **modules I & II**; ***THREE*** questions from **modules III & IV**; ***FOUR*** questions from **modules V & VI**).
   All the TEN questions have to be answered.
3. **Part B**
   a. **Total marks : 18**
   b. *THREE* questions, each having **9 marks**. One question is from **module I**; one question is from **module II**; one question ***uniformly*** covers **modules I & II**.
   c. *Any TWO* questions have to be answered.
   d. Each question can have ***maximum THREE*** subparts.
4. **Part C**
   a. **Total marks : 18**
   b. *THREE* questions, each having **9 marks**. One question is from **module III**; one question is from **module IV**; one question ***uniformly*** covers **modules III & IV**.
   c. *Any TWO* questions have to be answered.
   d. Each question can have ***maximum THREE*** subparts.
5. **Part D**
   a. **Total marks : 24**
   b. *THREE* questions, each having **12 marks**. One question is from **module V**; one question is from **module VI**; one question ***uniformly*** covers **modules V & VI**.
   c. *Any TWO* questions have to be answered.
   d. Each question can have ***maximum THREE*** subparts.
6. There will be *AT LEAST* 50% analytical/numerical questions in all possible combinations of question choices.

NEHRU COLLEGE OF ENGINEERING & RESEARCH CENTRE
PAMPADY THIRUVILWAMALA, THRISSUR DT.

PRINCIPAL
Nehru College of
Engineering and Research Centre
Pampady, Thiruvilwamala, Thrissur Dt
Pin - 680 597, Kerala

For more study materials>www.ktustudents.in

NEHRU COLLEGE OF ENGINEERING AND RESEARCH CENTRE
(NAAC Accredited)
(Approved by AICTE, Affiliated to APJ Abdul Kalam Technological University, Kerala)

Electronics and Communication Engineering

COURSE CODE	COURSE NAME	L-T-P-C	YEAR OF INTRODUCTION
EC307	Power Electronics & Instrumentation	3-0-0-3	2015

Prerequisite: EC205 Electronic Circuits

Course objectives:
The purpose of this course is:
1. To provide an insight on the concepts of Power Electronics and Electronic instruments.
2. To study the applications of Power electronics such as Switched mode regulators and inverters.
3. To develop understanding of the concept ofTransducers and Digital instruments.

Syllabus:
Power semiconductor switches and its static and dynamic characteristics. Switched mode regulators, SMPS, Switched mode inverters, UPS.
Performance characteristics of instruments, Measurement of passive components, Different Transducers, Digital Instruments.

Expected outcome:
The student should able:
1. To understand the concepts of Power Electronics and the various applications.
2. To get an insight on various electronic instruments, their configuration and measurements using them.
3. To understand the principle of operation of Transducers

Text Books:
1. Umanand L., Power Electronics Essentials and Applications, Wiley India, 2015.
2. Rashid M. H., "Power Electronics Circuits, Devices and Applications", Prentice Hall India, Third Edition, New Delhi.
3. Bell D. A., Electronic Instrumentation and Measurements, Oxford University Press, 2003.

KTU STUDENTS

References:
1. Mohan N. and T. M. Undeland, Power Electronics: Converters, Applications and Design, John Wiley, 2007.
2. Mandal, Power Electronics 1e, McGraw Hill Education India, 2014
3. Nakra, Instrumentation, Measurement and Analysis,4e, Mc Graw –Hill Education New Delhi,2016
4. Daniel W. Hart, Power Electronics, McGraw Hill, 2011.
5. Doeblin E., Measurement Systems, 5/e, McGraw Hill, 2003.
6. Helfrick A. D. and W. D. Cooper: Modern Electronic Instrumentation and Measurement Techniques, 5/e, PHI, 2003.
7. Patranabis D., Principles of Electronic Instrumentation, PHI, 2008.

NEHRU COLLEGE OF ENGINEERING & RESEARCH CENTRE THRISSUR

PRINCIPAL
Nehru College of Engineering and Research Centre
Pampady, Thiruvilwamala, Thrissur Dt.
Pin - 680 597, Kerala

For more study materials>www.ktustudents.in

Course Plan			
Module	**Course content**	**Hours**	**Sem. Exam Marks**
I	Linear Electronics versus Power Electronics - Power semiconductor switches.	1	15
	Power diodes-structure, static and dynamic characteristics	2	
	Power transistors - Power BJT, Power MOSFET, GTO and IGBT	3	
	Steady state and switching characteristics of Power BJT, Power MOSFET and IGBT.	2	
II	Introduction to Switched mode regulators	1	15
	Buck, Boost and Buck-Boost DC-DC converters	2	
	Waveforms and expression of DC-DC converters for output voltage, voltage and current ripple under continuous conduction mode. (Derivation not required)	1	
	Isolated converters - Flyback, Forward, Push Pull, Half Bridge and Full Bridge Converters - waveforms and governing equations. (Derivation not required)	3	
FIRST INTERNAL EXAM			
III	Overview of SMPS, Switched mode inverters- Principles of PWM switching schemes.	2	15
	Single phase inverters - half bridge, full bridge and push pull	2	
	UPS - on line and off line.	1	
	Three phase inverters - PWM and Space vector modulation in three phase inverters.	3	
IV	Generalized configurations of instruments - Functional elements. Classification of instruments	1	15
	Generalized performance characteristics of instruments - Static characteristics and Dynamic characteristics.	2	
	Measurement of: resistance using Wheastone's bridge, inductance using Maxwell-Wien bridge, and capacitance using Schering's bridge.	2	
SECOND INTERNAL EXAM			
V	Transducers - Classification, Selection of transducers.	1	20
	Resistance transducers - Principle of operation, strain gauge.	2	
	Inductive Transducers: LVDT.	2	
	Capacitive transducers - different types, capacitor microphone, Hall Effect transducer, proximity transducers.	2	
VI	Electronic Multimeter, Audio Power Meter, RF power meter	2	20
	Digital Instruments - Basics, digital measurement of time, phase, frequency and digital voltmeter.	2	

KTU STUDENTS

NEHRU COLLEGE OF ENGINEERING AND RESEARCH CENTRE
PRINCIPAL
Nehru College of Engineering and Research Centre

For more study materials>www.ktustudents.in

	Frequency synthesizer, Spectrum analyzers, Logic State analyzers (block diagram only).	1	
	Digital storage oscilloscope – Working Principle, controls and applications.	2	
END SEMESTER EXAM			

Question Paper Pattern

The question paper consists of three parts. Part A covers modules I and II, Part B covers modules III and IV and Part C covers modules V and VI. Each part has three questions. Each question can have a maximum of four subparts. Among the three questions one will be a compulsory question covering both the modules and the remaining two questions will be as one question from each module, of which one is to be answered. Mark pattern is according to the syllabus with 100 % for theory.

KTU STUDENTS

NEHRU COLLEGE OF ENGINEERING AND RESEARCH CENTRE
PAMPADY
THIRUVILWAMALA
THRISSUR

PRINCIPAL
Nehru College of
Engineering and Research Centre
Pampady, Thiruvilwamala, Thrissur Dt
Pin - 680 597, Kerala

For more study materials>www.ktustudents.in

KTU Students

COURSE CODE	COURSE NAME	L-T-P-C	YEAR OF INTRODUCTION
EC401	INFORMATION THEORY & CODING	4-0-0-4	2016

Prerequisite: EC302 Digital Communication

Course objectives:

- To introduce the concept of information
- To understand the limits of error free representation of information signals and the transmission of such signals over a noisy channel
- To design and analyze data compression techniques with varying efficiencies as per requirements
- To understand the concept of various theorems proposed by Shannon for efficient data compression and reliable transmission
- To give idea on different coding techniques for reliable data transmission
- To design an optimum decoder for various coding schemes used.

Syllabus: Concept of amount of information, Entropy, Source coding, Channel Capacity, Shannon's Limit, Rate Distortion Theory, Channel Coding, Linear Block Codes, Cyclic codes, Cryptography, Convolutional Codes, Viterbi Algorithm

Expected outcome:

The students will be able to

i. Apply the knowledge of Shannon's source coding theorem and Channel coding theorem for designing an efficient and error free communication link.
ii. Analyze various coding schemes
iii. Design an optimum decoder for various coding schemes used.

KTU STUDENTS

Text Books

1. P S Sathya Narayana, Concepts of Information Theory & Coding, Dreamtech Publications, 2005
2. Simon Haykin: Digital Communication Systems, Wiley India, 2013.

References:

1. Bose, Information theory coding and cryptography, 3/e McGraw Hill Education India , 2016
2. D.E.R. Denning, Cryptography and Data Security, Addison Wesley, 1983.
3. J S Chitode, Information Theory and Coding, Technical Publications, Pune, 2009
4. Kelbert & Suhov, Information theory and coding by examples, Cambridge University Press, 2013
5. Shu Lin & Daniel J. Costello. Jr., Error Control Coding : Fundamentals and Applications, 2/e, Prentice Hall Inc., Englewood Cliffs, NJ,2004

Course Plan

Module	Course contents	Hours	End Sem. Exam Marks
I	Introduction to Information Theory. Concept of information, units, entropy, marginal, conditional and joint entropies, relation among entropies, mutual information, information rate. Source coding: Instantaneous codes, construction of instantaneous codes, Kraft's inequality, coding efficiency and redundancy	9	15%
II	Noiseless coding theorem , construction of basic source codes, Shannon – Fano Algorithm, Huffman coding, Channel capacity	9	15%

For more study materials visit www.ktustudents.in

PRINCIPAL
Nehru College of Engineering and Research Centre
Pampady, Thiruvilwamala, Thrissur Dt
Pin - 680597 Kerala

	symmetric channel (BSC), Binary erasure channel (BEC) – capacity of band limited Gaussian channels		
FIRST INTERNAL EXAM			
III	Continuous Sources and Channels: Differential Entropy, Mutual information, Waveform channels, Gaussian channels, Shannon – Hartley theorem, bandwidth, SNR trade off, capacity of a channel of infinite bandwidth, Shannon's limit	9	**15%**
IV	Introduction to rings, fields, and Galois fields. Codes for error detection and correction – parity check coding – linear block codes – error detecting and correcting capabilities – generator and parity check matrices – Standard array and syndrome decoding	9	**15%**
SECOND INTERNAL EXAM			
V	Perfect codes, Hamming codes, encoding and decoding Cyclic codes, polynomial and matrix descriptions, generation of cyclic codes, decoding of cyclic codes BCH codes, Construction and decoding, Reed Solomon codes	9	**20%**
VI	Convolutional Codes – encoding – time and frequency domain approaches, State Tree & Trellis diagrams – transfer function and minimum free distance – Maximum likelihood decoding of convolutional codes – The Viterbi Algorithm. Sequential decoding.	9	**20%**
END SEMESTER EXAM			

Question Paper

KTU STUDENTS

The question paper shall consist of three parts. Part A covers modules I and II, Part B covers modules III and IV, and Part C covers modules V and VI. Each part has three questions uniformly covering the two modules and each question can have maximum four subdivisions. In each part, any two questions are to be answered. Mark patterns are as per the syllabus with 50% for theory and 50% for logical/numerical problems, derivation and proof.

Estd. 2014

NEHRU COLLEGE OF ENGINEERING AND RESEARCH CENTRE THIRUVILWAMALA THRISSUR DT

PRINCIPAL
Nehru College of
Engineering and Research Centre
Pampady, Thiruvilwamala, Thrissur Dt
Pin 680 597 Kerala

For more study materials>www.ktustudents.in

KTU STUDENTS

COURSE CODE	COURSE NAME	L-T-P-C	YEAR OF INTRODUCTION
EC402	NANOELECTRONICS	3-0-0 -3	2016

Prerequisite: EC203 Solid State Devices, EC304 VLSI

Course objectives:

- To introduce the concepts of nanoelectronics.

Syllabus:

Introduction to nanotechnology, Mesoscopic physics, trends in microelectronics and optoelectronics, characteristic lengths in mesoscopic systems, Quantum mechanical coherence, Schrodinger's Equation, wave function, Low dimensional structures Quantum wells, Basic properties of two dimensional semiconductor nanostructures, Quantum wires and quantum dots, carbon nano tube, grapheme, Introduction to methods of fabrication of nano-layers, Introduction to characterization of nanostructures, Principle of operation of Scanning Tunnelling Microscope, X-Ray Diffraction analysis, MOSFET structures, Quantum wells, modulation doped quantum wells, multiple quantum wells, The concept of super lattices, Transport of charge in Nanostructures under Electric field, Transport of charge in magnetic field, Nanoelectonic devices, principle of NEMS

Expected outcome:

- The students will be able to understand basic concepts of nanoelectronic devices and nano technology.

Text Books:

1. J.M. Martinez-Duart, R.J. Martin-Palma, F. Agulle-Rueda, Nanotechnology for Microelectronics and optoelectronics, Elsevier, 2006
2. G.R. Fahrner, Nanotechnology and Nanoelctronics, Springer, 2005

KTU STUDENTS

References:

1. Chattopadhyay, Banerjee, Introduction to Nanoscience & Technology, PHI, 2012
2. George W. Hanson, Fundamentals of Nanoelectronics, Pearson Education, 2009.
3. K. Goser, P. Glosekotter, J. Dienstuhl, Nanoelectronics and nanosystems, Springer 2004.
4. Murty, Shankar, Text book of Nanoscience and Nanotechnology, Universities Press, 2012.
5. Poole, Introduction to Nanotechnology, John Wiley, 2006.
6. Supriyo Dutta, Quantum Transport- Atom to transistor, Cambridge, 2013.

Course Plan

Module	Course contents	Hours	End Sem. Exam Marks
I	Introduction to nanotechnology, Impacts, Limitations of conventional microelectronics, Trends in microelectronics and optoelectronics	1	15%
	Mesoscopic physics, trends in microelectronics and optoelectronics, characteristic lengths in mesoscopic systems, Quantum mechanical coherence	2	
	Classification of Nano structures, Low dimensional structures Quantum wells, wires and dots, Density of states and dimensionality	1	

For more study materials>www.ktustudents.in

NEHRU COLLEGE OF ENGINEERING & RESEARCH CENTRE THIRUVILWAMALA, THRISSUR
PRINCIPAL
Nehru College of Engineering and Research Centre
Thiruvilwamala, Thrissur
Dist. Kerala

	Basic properties of two dimensional semiconductor nanostructures, square quantum wells of finite depth, parabolic and triangular quantum wells,	2	
	Quantum wires and quantum dots, carbon nano tube, graphene	1	
II	Introduction to methods of fabrication of nano-layers, different approaches, physical vapour deposition, chemical vapour deposition	2	15%
	Molecular Beam Epitaxy, Ion Implantation, Formation of Silicon Dioxide- dry and wet oxidation methods.	2	
	Fabrication of nano particle- grinding with iron balls, laser ablation, reduction methods, sol gel, self assembly, precipitation of quantum dots.	2	
FIRST INTERNAL EXAM			
III	Introduction to characterization of nanostructures, tools used for of nano materials characterization, microscope-optical, electron, and electron microscope.	2	15%
	Principle of operation of Scanning Tunnelling Microscope, Atomic Force Microscope, Scanning Electron microscope, Specimen interaction. Transmission Electron Microscope	2	
	X-Ray Diffraction analysis, PL & UV Spectroscopy, Particle size analyser.	2	
IV	Two dimensional electronic system, two dimensional behaviour, MOSFET structures, Heterojunctions	2	15%
	Quantum wells, modulation doped quantum wells, multiple quantum wells	2	
	The concept of super lattice, Kronig - Penney model of superlattice.	[illegible]	
V	Transport of charge in Nanostructures under Electric field - parallel transport, hot electrons, perpendicular transport.	2	20%
	Quantum transport in nanostructures, Coulomb blockade	2	
	Transport of charge in magnetic field - Effect of magnetic field on a crystal. Aharonov-Bohm effect, the Shubnikov-de Hass effect, the quantum Hall effect.	3	
VI	Nanoelectonic devices- MODFETS, heterojunction bipolar transistors	1	20%
	Resonant tunnel effect, RTD, RTT, Hot electron transistors	2	
	Coulomb blockade effect and single electron transistor, CNT transistors	2	
	Heterostructure semiconductor laser	1	
	Quantum well laser, quantum dot LED, quantum dot laser	2	
	Quantum well optical modulator, quantum well sub band photo detectors, principle of NEMS.	2	
END SEMESTER EXAM			

KTU STUDENTS

PRINCIPAL
Nehru College of
Engineering and Research Centre
Thiruvilwamala, Thrissur Dt
Kerala

For more study materials>www.ktustudents.in

Question Paper Pattern

The question paper shall consist of three parts. Part A covers modules I and II, Part B covers modules III and IV, and Part C covers modules V and VI. Each part has three questions uniformly covering the two modules and each question can have maximum four subdivisions. In each part, any two questions are to be answered. Mark patterns are as per the syllabus with 70% for theory and 30% for logical/numerical problems, derivation and proof.

KTU STUDENTS

NEHRU COLLEGE OF ENGINEERING & RESEARCH CENTRE
THRISSUR

PRINCIPAL
Nehru College of
Engineering and Research Centre
Pampady, Thiruvilwamala, Thrissur Dt
Pin 680 597 Kerala

For more study materials>www.ktustudents.in

COURSE CODE	COURSE NAME	L-T-P-C	YEAR OF INTRODUCTION
EC403	MICROWAVE & RADAR ENGINEERING	3-0-0-3	2016

Prerequisite: EC303 Applied Electromagnetic Theory, EC306 Antenna & Wave Propagation

Course objectives:

- To introduce the various microwave sources, their principle of operation and measurement of various parameters
- To study the various microwave hybrid circuits and formulate their S matrices.
- To understand the basic concepts, types, working of radar and introduce to radar transmitters and receivers.

Syllabus:
Microwaves: introduction, advantages, Cavity Resonators, Microwave vacuum type amplifiers and sources, Klystron Amplifiers, Reflex Klystron Oscillators, Magnetron oscillators, Travelling Wave Tube, Microwave measurements, Microwave hybrid circuits, Directional couplers, Solid state microwave devices, Gunn diodes, Radar, MTI Radar, Radar Transmitters, Radar receivers.

Expected outcome:
The students will be able to understand the basics of microwave engineering and radar systems.

Text Books:

1. Merrill I. Skolnik, Introduction to Radar Systems, 3/e, Tata McGraw Hill, 2008.
2. Samuel Y. Liao, Microwave Devices and Circuits, 3/e, Pearson Education, 2003.

References:

1. Das, Microwave Engineering, 3/e, McGraw Hill Education India Education , 2014
2. David M. Pozar, Microwave Engineering, 4/e, Wiley India, 2012
3. Kulkarni M, Microwave and Radar Engineering, 4/e, Umesh Publication, 2012
4. Rao, Microwave Engineering, 4/e, PHI, 2011
5. Robert E. Collin, Foundations for Microwave Engineering, 2/e, Wiley India, 2012.

KTU STUDENTS

Course Plan

Module	Course contents	Hours	End Sem. Exam Marks
I	**Microwaves:** introduction, advantages, Cavity Resonators - Rectangular and Circular wave guide resonators- Derivation of resonance frequency of Rectangular cavity.	4	15%
	Microwave vacuum type amplifiers and sources: Klystron Amplifiers - Re-entrant cavities, Velocity modulation, Bunching (including analysis), Output power and beam	4	
II	**Reflex Klystron Oscillators**: Derivation of Power output, efficiency and admittance	2	15%
	Magnetron oscillators: Cylindrical magnetron, Cyclotron angular frequency, Power output and efficiency.	3	
	FIRST INTERNAL EXAM		
III	**Travelling Wave Tube**: Slow wave structures, Helix TWT, Amplification process, Derivation of convection current, axial electric field, wave modes and gain.	4	15%
	Microwave measurements: Measurement of impedance, frequency and power	2	

For more study materials>www.ktustudents.in

PRINCIPAL
Nehru College of Engineering and Research Centre

IV	**Microwave hybrid circuits**: Scattering parameters, Waveguide tees- Magic tees, Hybrid rings, Corners, Bends, and Twists. Formulation of S-matrix.	5	15%
	Directional couplers: Two hole directional couplers, S-matrix of a directional coupler. Circulators and isolators.	4	
SECOND INTERNAL EXAM			
V	**Solid state microwave devices**: Microwave bipolar transistors, Physical structures, Power frequency limitations equivalent circuit. Principle of **Tunnel diodes** and tunnel	4	20%
	Gunn diodes: Different modes, Principle of operation Gunn Diode Oscillators.	2	
VI	**Radar**: The simple Radar equation. Pulse Radar, CW Radar, CW Radar with non zero IF, Equation for doppler frequency FM-CW Radar using sideband super heterodyne receiver. **MTI Radar**-Delay line canceller, MTI Radar with power amplifier & power oscillator, Non coherent MTI Radar, Pulse	5	20%
	Radar Transmitters: Radar Modulator-Block diagram, **Radar receivers**- noise figure, low noise front ends, Mixers, Radar Displays	3	
END SEMESTER EXAM			

Question Paper Pattern

The question paper shall consist of three parts. Part A covers modules I and II, Part B covers module III and IV, and Part C covers modules V and VI. Each part has three questions uniformly covering the two modules and each question can have maximum four subdivisions. In each part any two questions are to be answered. Mark patterns are as per the syllabus with 60% for theory and 40% for logical/numerical problems, derivation and proof.

KTU STUDENTS

NEHRU COLLEGE OF ENGINEERING & RESEARCH CENTRE
THIRUVILWAMALA
THRISSUR DT

PRINCIPAL
Nehru College of
Engineering and Research Centre
Pampady, Thiruvilwamala, Thrissur Dt
Pin 680 597, Kerala

For more study materials>www.ktustudents.in

KTU Students

COURSE CODE	COURSE NAME	L-T-P-C	YEAR OF INTRODUCTION
EC404	ADVANCED COMMUNICATION SYSTEMS	3-0-0 -3	2016

Prerequisite: EC302 Digital Communication, EC403 Microwave & Radar Engineering

Course objectives:

- To impart the basic concepts of various communication system.

Syllabus:

Microwave Radio Communications, Diversity, protection switching arrangements, Digital TV, Satellite communication systems, Satellite sub systems, Evolution of mobile radio communications, Introduction to Modern Wireless Communication Systems, wireless networks, Over view of WIMAX technologies, Cellular concept, Wireless propagation mechanism, Introduction to Multiple Access GSM system architecture, Introduction to new data services

Expected outcome:

- The students will be able to understand the basics and technology of advanced communication system

Text Books:

1. Dennis Roody, Satellite communication, 4/e, McGraw Hill, 2006.
2. Herve Benoit, Digital Television Satellite, Cable, Terrestrial, IPTV, Mobile TV in the DVB Framework, 3/e, Focal Press, Elsevier, 2008
3. Simon Haykin, Michael Mohar, Modern wireless communication, Pearson Education, 2008
4. Theodore S. Rappaport: Wireless communication principles and practice,2/e, Pearson Education, 1990

KTU STUDENTS

References:

1. Jochen Schiller, Mobile Communications, Pearson, 2008.
2. Misha, Wireless communications and Networks, McGraw Hill, 2/e, 2003.
3. Rappaport, Wirelesscommunications,PHI, 2012.
4. Singal, Wireless communications, Mc Graw Hill, 2010.
5. Tomasi, Advanced Electronic Communication Systems, 6/e, Pearson, 2015.
6. W.C.Y.Lee, Mobile Cellular Telecommunication, McGraw Hill, 2010.

Course Plan

Module	Course content (42hrs)	Hours	End Sem. Exam Marks
I	Microwave Radio Communications : Introduction, Advantages and Disadvantages, Analog vs digital microwave, frequency vs amplitude modulation	1	15%
	Frequency modulated microwave radio system, FM microwave radio repeaters	1	
	Diversity, protection switching arrangements, FM microwave radio stations, microwave repeater station, line of sight path characteristics	2	
II	Digital TV: Digitized Video, Source coding of Digitized Video, Compression of Frames, DCT based (JPED), Compression of Moving Pictures (MPEG). Basic blocks of MPEG2 and MPE4,Digital Video Broadcasting (DVB)	4	15%
	Modulation: QAM (DVB-S, DVB-C), OFDM for Terrestrial Digital TV (DVB-T), Reception of Digital TV Signals (Cable, Satellite and	4	

For more study materials visit KTUStudents.in

NEHRU COLLEGE OF ENGINEERING & RESEARCH CENTRE THRISSUR
PRINCIPAL Nehru College of Engineering and Research Centre

	terrestrial). Digital TV over IP, Digital terrestrial TV for mobile		
	Display Technologies: basic working of Plasma, LCD and LED Displays	2	
	FIRST INTERNAL EXAM		
III	Satellite Communication systems, introduction, Kepler's laws, orbits, orbital effects, orbital perturbations	2	15%
	Satellite sub systems, Antennas, Transponders, earth station technology, Link calculation,	2	
	Satellite systems- GEO systems, non-GEO communication systems, Satellite Applications- Global Positioning System, Very Small Aperture Terminal system, Direct to Home Satellite Systems	3	
IV	Evolution of mobile radio communications, paging systems, Cordless telephone systems, comparison of various wireless systems	2	15%
	Introduction to Modern Wireless Communication Systems, Second generation cellular networks, third generation wireless networks, fourth generation wireless technologies	1	
	Wireless in local loop, wireless local area networks, Blue tooth and Personal Area networks, Over view of WIMAX Technologies, architecture, spectrum allocation	2	
	SECOND INTERNAL EXAM		
	Cellular concept, hand off strategies, Interference and system capacity: Cell splitting, Sectoring, Repeaters, and Microcells. Cellular System Design Fundamentals: Frequency Reuse, channel assignment strategies, handoff Strategies, Interference and system capacity, tracking and grade off service, improving coverage and capacity	3	
	Wireless propagation mechanism, free space propagation model, ground reflection model, knife edge diffraction model, path loss prediction in hilly terrain, introduction to fading and diversity techniques, Introduction to MIMO system	3	[illegible]
VI	Introduction to Multiple Access, FDMA, TDMA, Spread Spectrum multiple Access, space division multiple access, CDMA, OFDM	2	20%
	Wireless Networking, Difference between wireless and fixed telephone networks, development of wireless networks, fixed network transmission hierarchy, traffic routing in wireless networks, wireless data services, Wireless standards,	2	
	GSM system architecture, radio link aspects, network aspects	1	
	Introduction to new data services like High Speed Circuit Switched Data (HSCSD), General Packet Radio Service (GPRS), Digital Enhanced Cordless Telecommunications (DECT) , Enhanced Data Rate for Global Evolution (EDGE), Ultra wideband systems (UWB), Push To Talk (PTT) technology, Mobile IP	5	
	END SEMESTER EXAM		

KTU STUDENTS

Question Paper Pattern

The question paper shall consist of three parts. Part A covers modules I and II, Part B covers modules III and IV, and Part C covers modules V and VI. Each part has three questions uniformly covering the two modules and each question can have maximum four subdivisions. In each part, any two questions are to be answered. Mark patterns are as per the syllabus with 60% for theory and 40% for logical/numerical problems, derivation and proof.

PRINCIPAL
Nehru College of Engineering and Research Centre
Pampady, Thiruvilwamala, Thrissur Dt
Pin - 680 597 Kerala

For more study materials>www.ktustudents.in

KTU Students

COURSE CODE	COURSE NAME	L-T-P-C	YEAR OF INTRODUCTION
EC405	OPTICAL COMMUNICATION	3-0-0-3	2016

Prerequisite: EC203 Solid State Devices, EC205 Electronic Circuits

Course objectives:

- To introduce the concepts of light transmission through optical fibers, optical sources and detectors.
- To compare the performance of various optical transmission schemes.
- To impart the working of optical components and the principle of operation of optical amplifiers.
- To give idea on WDM technique.

Syllabus: General light wave system, advantages, classification of light wave systems, fibre types, linear and non linear effects in fibres, Fibre materials, fabrication of fibres, Optical sources, LEDs and LDs Optical detectors, Optical receivers, Digital transmission systems, Optical Amplifiers, WDM concept, Introduction to free space optics, Optical Time Domain Reflectometer (OTDR).

Expected outcome:

The students will be able to:-

i. Know the working of optical source and detectors.
ii. Compare the performance of various optical modulation schemes.
iii. Apply the knowledge of optical amplifiers in the design of optical link.
iv. Analyse the performance of optical amplifiers.
v. Know the concept of WDM
vi. Describe the principle of FSO and LiFi.

KTU STUDENTS

Text Books:

1. Gerd Keiser, Optical Fiber Communications, 5/e, McGraw Hill, 2013.
2. Mishra and Ugale, Fibre optic communication, Wiley, 2011.

References:

1. Chakrabarthi, Optical Fibre Communication, McGraw Hill, 2015.
2. Hebbar, Optical fibre communication, Elsevier, 2014
3. John M Senior- Optical communications, 3/e, Pearson, 2009.
4. Joseph C. Palais, Fibre Optic Communications, 5/e Pearson, 2013.
5. Keiser, Optical Communication Essentials (SIE), 1/e McGraw Hill Education New Delhi, 2008.

Course Plan

Module	Course contents	Hours	End Sem. Exam Marks
I	General light wave system, advantages, classification of light wave systems. Fibres: types and refractive index profiles, mode theory of fibres: modes in SI and GI fibres, linear and non linear effects in fibres, dispersion, Group Velocity Dispersion, modal, wave guide and Polarization, Modes, Dispersion, attenuation- absorption, bending and scattering losses.	8	15%
II	Fibre materials, fabrication of fibres, photonic crystal fibre, index guiding PCF, photonic bandgap fibre, fibre cables. Optical sources, LEDs and LDs structures, characteristics	7	15%

NEHRU COLLEGE OF ENGINEERING & RESEARCH CENTRE
PRINCIPAL
Nehru College of Engineering and Research Centre
Pampady, Thiruvilwamala, Thrissur
For more study materials visit ktustudents.in

	modulators using LEDs and LDs. coupling with fibres, noise in Laser diodes, Amplified Spontaneous Emission noise, effects of Laser diode noise in fibre communications		
FIRST INTERNAL EXAM			
III	Optical detectors, types and characteristics, structure and working of PIN and AP, noise in detectors, comparison of performance. Optical receivers, Ideal photo receiver and quantum limit of detection.	6	**15%**
IV	Digital transmission systems, design of IMDD links- power and rise time budgets, coherent Systems, sensitivity of a coherent receiver, comparison with IMDD systems. Introduction to soliton transmission, soliton links using optical amplifiers, GH effect, soliton-soliton interaction, amplifier gain fluctuations, and design guide lines of soliton based links.	8	**15%**
SECOND INTERNAL EXAM			
V	Optical Amplifiers ,basic concept, applications, types, doped fibre amplifiers, EDFA, basic theory, structure and working, Semiconductor laser amplifier, Raman amplifiers, TDFA, amplifier configurations, performance comparison.	6	**20%**
VI	The WDM concept, WDM standards, WDM components, couplers, splitters, Add/ Drop multiplexers, gratings, tunable filters, system performance parameters. Introduction to optical networks. Introduction to free space optics, LiFi technology and VLC. Optical Time Domain Reflectometer (OTDR) – fault detection, length and refractive index measurements.	7	**20%**
END SEMESTER EXAM			

KTU STUDENTS

Question Paper Pattern

The question paper shall consist of three parts. Part A covers modules I and II, Part B covers modules III and IV, and Part C covers modules V and VI. Each part has three questions uniformly covering the two modules and each question can have maximum four subdivisions. In each part, any two questions are to be answered. Mark patterns are as per the syllabus with 50% for theory and 50% for logical/numerical problems, derivation and proof.

NEHRU COLLEGE OF ENGINEERING & RESEARCH CENTRE

PRINCIPAL
Nehru College of
Engineering and Research Centre
Pampady, Thiruvilwamala, Thrissur
Pin 680 597 Kerala

For more study materials>www.ktustudents.in

COURSE CODE	COURSE NAME	L-T-P-C	YEAR OF INTRODUCTION
EC407	COMPUTER COMMUNICATION	3-0-0-3	2016

Prerequisite: NIL

Course objectives:

- To give the basic concepts of computer network and working of layers, protocols and interfaces in a computer network.
- To introduce the fundamental techniques used in implementing secure network communications and give them an understanding of common threats and its defences.

Syllabus: Introduction to computer communication, Transmission modes, Networks, Interconnection of Networks: Internetwork, Network models: OSI model, TCP/IP protocol suite. Physical Layer, Data Link Layer, Media access control, Ethernet(802.3), Logical link control, Logical addressing: IPV4, IPV6, Subnetting, CIDR, ICMP, IGMP, DHCP, Routing, Transport Layer, Congestion Control & Quality of Service, Application Layer, Introduction to system and network security, security attacks, Firewalls, Intrusion detection systems.

Expected outcome:

The students will have a thorough understanding of:

i. Different types of network topologies and protocols.
ii. The layers of the OSI model and TCP/IP with their functions.
iii. The concept of subnetting and routing mechanisms.
iv. The basic protocols of computer networks, and how they can be used to assist in network design and implementation.
v. Security aspects in designing a trusted computer communication system.

KTU STUDENTS

Text Books:

1. Behrouz A. Forouzan, Cryptography & Network Security, IV Edition, Tata McGraw-Hill, 2008
2. J F Kurose and K W Ross, Computer Network A Top-down Approach Featuring the Internet, 3/e, Pearson Education, 2010

References:

1. Behrouz A Forouzan, Data Communications and Networking, 4/e, Tata McGraw-Hill, 2006.
2. Larry Peterson and Bruce S Davie: Computer Network- A System Approach, 4/e, Elsevier India, 2011.
3. S. Keshav, An Engineering Approach to Computer Networking, Pearson Education, 2005.
4. Achyut S.Godbole, Data Communication and Networking, 2e, McGraw Hill Education New Delhi, 2011

Course Plan

Module	Course content (42 hrs)	Hours	End Sem. Exam Marks
I	Introduction to computer communication: Transmission modes - serial and parallel transmission, asynchronous, synchronous, simplex, half duplex, full duplex communication. Switching: circuit switching and packet switching	2	15%

For more study materials>www.ktustudents.in

PRINCIPAL
Nehru College of Engineering and Research Centre
Pambady, Thiruvilwamala
Pin 680 597 Kerala

	Networks: Network criteria, physical structures, network models, categories of networks, Interconnection of Networks: Internetwork	2	
	Network models: Layered tasks, OSI model, Layers in OSI model, TCP/IP protocol suite.	2	
II	Physical Layer: Guided and unguided transmission media (Co-axial cable, UTP,STP, Fiber optic cable)	2	15%
	Data Link Layer: Framing, Flow control (stop and wait , sliding window flow control)	2	
	Error control, Error detection(check sum, CRC), Bit stuffing, HDLC	2	
	Media access control: Ethernet (802.3), CSMA/CD, Logical link control, Wireless LAN (802.11), CSMA/CA	2	
	FIRST INTERNAL EXAM		
	Network Layer Logical addressing : IPv4 & IPV6	2	15%
	Address Resolution protocols (ARP, RARP)	2	
	Subnetting, Classless Routing(CIDR), ICMP, IGMP, DHCP	3	
III	Virtual LAN, Networking devices (Hubs, Bridges & Switches)	1	
IV	Routing: Routing and Forwarding, Static routing and Dynamic routing	1	15%
	Routing Algorithms: Distance vector routing algorithm, Link state routing (Dijkstra's algorithm)	2	
	Routing Protocols: Routing Information protocol (RIP), Open Shortest Path First (OSPF), Border Gateway Protocol (BGP), MPLS	3	
	SECOND INTERNAL EXAM		
V	Transport Layer –UDP, TCP	1	20%
	Congestion Control & Quality of Service – Data traffic, Congestion, Congestion Control, QoS and Flow Characteristics	4	
	Application Layer – DNS, Remote Logging (Telnet), SMTP, FTP, WWW, HTTP, POP3, MIME, SNMP	3	
VI	Introduction to information system security, common attacks	1	20%
	Security at Application Layer (E-MAIL, PGP and S/MIME). Security at Transport Layer (SSL and TLS). Security at Network Layer (IPSec).	3	
	Defence and counter measures: Firewalls and their types. DMZ, Limitations of firewalls, Intrusion Detection Systems -Host based, Network based, and Hybrid IDSs	2	
	END SEMESTER EXAM		

Question Paper Pattern

The question paper shall consist of three parts. Part A covers modules I and II, Part B covers modules III and IV, and Part C covers modules V and VI. Each part has three questions uniformly covering the two modules and each question can have maximum four subdivisions. In each part, any two questions are to be answered. Mark patterns are as per the syllabus with 90% for theory and 10% for logical/numerical problems, derivation and proof.

PRINCIPAL
Nehru College of
Engineering and Research Centre
Pampady, Thiruvilwamala, Thrissur Dt
Pin - 680 597, Kerala

KTU STUDENTS

For more study materials>www.ktustudents.in

KTU Students

COURSE CODE	COURSE NAME	L-T-P-C	YEAR OF INTRODUCTION
EC409	CONTROL SYSTEMS	3-0-0-3	2016

Prerequisite: EC202 Signals & Systems

Course objectives:

- To introduce the elements of control system and its modelling
- To introduce methods for analyzing the time response, the frequency response and the stability of systems.
- To design control systems with compensating techniques.
- To introduce the state variable analysis method.
- To introduce basic concepts of digital control systems.

Syllabus:

Control system, types and application, feedback system, mathematically modelling of control systems, block diagram representation, signal flow graph, Mason's formula, test signals, time response analysis, frequency analysis, stability concepts and analysis, state variable analysis, Observability and controllability, digital control systems , state space analysis, Jury's test

Expected outcome:

The Students will be able to

i. Represent mathematically a systems and deriving their transfer function model.
ii. Analyse the time response and frequency response of the systems for any input
iii. Find the stability of system
iv. Design a control system with suitable compensation techniques
v. Analyse a digital control system.

KTU STUDENTS

Text Books

1. Farid Golnaraghi, Benjamin C. Kuo, Automatic Control Systems, 9/e, Wiley India.
2. Gopal, Control Systems, 4/e, McGraw Hill Education India Education , 2012.
3. Ogata K., Discrete-time Control Systems, 2/e, Pearson Education.

References

1. Gopal, Digital Control and State Variable Method, 4/e, McGraw Hill Education India 2012.
2. Norman S. Nise, Control System Engineering, 5/e, Wiley India
3. Ogata K., Modern Control Engineering, Prentice Hall of India, 4/e, Pearson Education, 2002.
4. Richard C Dorf and Robert H. Bishop, Modern Control Systems, 9/e, Pearson Education, 2001.

Course Plan

Module	Course contents	Hours	End Sem Exam Marks
I	Basic Components of a Control System, Applications, Open-Loop Control Systems and Closed-Loop Control Systems, Examples of control system	1	15%
	Effects of Feedback on Overall Gain, Stability, External, disturbance on system	1	

NEHRU COLLEGE OF ENGINEERING & RESEARCH CENTRE
PRINCIPAL
Nehru College of Engineering and Research Centre
Thiruvilwamala, Thrissur Dt
Kerala

For more study materials>www.ktustudents.in

	Types of Feedback Control Systems, Linear versus Nonlinear Control Systems, Time-Invariant versus Time-Varying Systems.	1	
	Overview of solving differential equations using Laplace transforms	1	
	Mathematical modelling of control systems - Electrical Systems and Mechanical systems.	2	
	Block diagram representation and reduction methods	2	
	Signal flow graph and Mason's rule formula.	2	
II	Standard test signals. Time response specifications.	1	15%
	Time response of first and second order systems to unit step input, ramp inputs, time domain specifications	2	
	Steady state error and static error coefficients.	1	
	Dynamic error coefficient.	1	
	FIRST INTERNAL EXAM		
III	Stability of linear control systems: methods of determining stability, Routh's Hurwitz Criterion.	2	15%
	Root Locus Technique: Introduction, properties and its construction.	2	
	Frequency domain analysis: Frequency domain specifications, correlation between time and frequency responses.	1	
IV	Nyquist stability criterion: fundamentals and analysis	2	
	Relative stability: gain margin and phase margin. Stability analysis with Bode plot.	2	
	Design of Control Systems: PI,PD and PID controllers	2	
	Design with phase-lead and phase-lag controllers (frequency domain approach), Lag-lead	2	
	SECOND INTERNAL EXAM		
V	State variable analysis: state equation, state space representation of Continuous Time systems	2	20%
	Transfer function from State Variable Representation, Solutions of the state equations, state transition matrix	2	
	Concepts of Controllability and Observability, Kalman's Test, Gilbert's test	2	
VI	Discrete Control systems fundamentals: Overview of Z transforms. State space representation for Discrete time systems.	2	20%
	Sampled Data control systems, Sampling Theorem, Sample & Hold, Open loop & Closed loop sampled data systems.	2	
	State space analysis : Solving discrete time state space equations, pulse transfer function, Discretization of continuous time state space equations	3	
	Stability analysis of discrete time systems Jury's test	1	
	END SEMESTER EXAM		

KTU STUDENTS

NEHRU COLLEGE OF ENGINEERING & RESEARCH CENTRE
THIRUVILWAMALA
THRISSUR

PRINCIPAL
Nehru College of
Engineering and Research Centre
Pampady, Thiruvilwamala, Thrissur Dt
Pin 680 597 Kerala

For more study materials>www.ktustudents.in

Question Paper Pattern

The question paper shall consist of three parts. Part A covers modules I and II, Part B covers modules III and IV, and Part C covers modules V and VI. Each part has three questions uniformly covering the two modules and each question can have maximum four subdivisions. In each part, any two questions are to be answered. Mark patterns are as per the syllabus with 30% for theory and 70% for logical/numerical problems, derivation and proof.

KTU STUDENTS

PRINCIPAL
Nehru College of
Engineering and Research Centre
Thrissur Dt
Kerala

For more study materials>www.ktustudents.in

KTU STUDENTS

COURSE CODE	COURSE NAME	L-T-P-C	YEAR OF INTRODUCTION
EC461	MICROWAVE DEVICES AND CIRCUITS	3-0-0-3	2016

Prerequisite: EC403 Microwave & Radar Engineering

Course objectives:

- To study microwave semiconductor devices & applications.
- To study microwave sources and amplifiers.
- To analyse microwave networks.
- To introduce microwave integrated circuits.

Syllabus:

Limitation of conventional solid state devices at Microwave, Gunn – effect diodes, Microwave generation and amplification, IMPATT and TRAPATT diodes, Bipolar transistors, MESFET, Microwave amplifiers and oscillators, Microwave Network Analysis, Signal flow graphs, Microwave filters, Filter design by image parameter method, Filter transformation and implementation, Introduction to MICs, Distributed and lumped elements of integrated circuits, Diode control devices

Expected outcome:

The Students will be able to understand with active & passive microwave devices & components used in microwave communication systems and analyse microwave networks.

Text Books:

1. David M. Pozar, Microwave Engineering, 4/e, Wiley India, 2012
2. Robert E. Collin, Foundation of Microwave Engineering, 2/e, Wiley India, 2012.
3. Samuel Y. Liao, Microwave Devices and Circuits, 3/e, Pearson Education, 2003

KTU STUDENTS

References:

1. Bhagirathi Bhat and Shiban K. Koul: Stripline-like Transmission Lines for MIC, New Age International (P) Ltd, 1989.
2. I Kneppo, J. Fabian, et al., Microwave Integrated Circuits, BSP, India, 2006.
3. Leo Maloratsky, Passive RF and Microwave Integrated Circuits, Elsevier, 2006.

Course Plan

Module	Course contents	Hours	End Sem. Exam Marks
	Introduction, Characteristic, features of microwaves, Limitation of conventional solid state devices at Microwave.	1	
	Gunn – effect diodes – Gunn effect, Ridley – Watkins-Hilsum theory, Modes of operation, Limited space – Charge accumulation (LSA) mode of Gunn diode.	2	15%
	Microwave generation and amplification. Structure, Operation, Power output and efficiency of IMPATT and TRAPATT diodes	2	
	Bipolar transistors – biasing, FET – biasing, MESFET – Structure, Operation.	4	
II	Microwave amplifiers and oscillators – Amplifiers – Gain and stability, Single stage transistor amplifier design.	4	15%
	Oscillator design – One port negative resistance oscillators.	2	
	FIRST INTERNAL EXAM		

PRINCIPAL
Nehru College of Engineering and Research Centre
Pambady, Thrissur (Dt)
Kerala

III	Microwave Network Analysis – Equivalent voltages and currents, Impedance and Admittance matrices, Scattering matrix, The transmission matrix.	3	15%
	Signal flow graphs. Impedance matching and tuning – Matching with lumped elements, Single stub tuning, Double stub tuning. Quarter wave transformer, Theory of small reflections.	4	
IV	Microwave filters – Periodic structures – Analysis of infinite periodic structures and terminated periodic structures, Filter design by image parameter method – Constant k, m-derived and composite. Filter design by insertion loss method. Filter transformation and implementation.	7	15%
	SECOND INTERNAL EXAM		
V	Introduction to MICSs:-Technology of hybrid MICs, monolithic MICs. Comparison of both MICs.	4	20%
	Planar transmission lines such as stripline, microstrip line, and slotline.	3	
VI	Distributed and lumped elements of integrated circuits - capacitors, inductors, resistors, terminations, attenuators, resonators and discontinuities.	5	20%
	Diode control devices – switches, attenuators, limiters. Diode phase shifter. Circulators and isolators.	2	
	END SEMESTER EXAM		

Question Paper Pattern

The question paper shall consist of three parts. Part A covers modules I and II, Part B covers modules III and IV, and Part C covers modules V and VI. Each part has three questions uniformly covering the two modules and each question can have maximum four subdivisions. In each part, any two questions are to be answered. Mark patterns are as per the syllabus with 70% for theory and 30% for logical/numerical problems, derivation and proof.

NEHRU COLLEGE OF ENGINEERING & RESEARCH CENTRE
Pampady, Thiruvilwamala, Thrissur-Dt

PRINCIPAL
Nehru College of
Engineering and Research Centre
Pampady, Thiruvilwamala, Thrissur Dt
Pin - 680 597, Kerala

For more study materials>www.ktustudents.in

KTU Students

COURSE CODE	COURSE NAME	L-T-P-C	YEAR OF INTRODUCTION
EC462	MIXED SIGNAL CIRCUIT DESIGN	3-0-0 -3	2016

Prerequisite: EC 304 VLSI, EC308 Embedded Systems

Course objectives:

- To give the knowledge about various analog and digital CMOS circuits
- To impart the skill in analysis and design of analog and digital CMOS circuits.

Syllabus:

CMOS Amplifiers: CS,CG,CD stages, Cascoded stages, Folded cascode Amplifier, MOS Current Mirror, MOSFET cascode current mirror, Differential Amplifiers, MOS telescopic cascode amplifier,CMOS OP AMPS, Design of classical Two Stage OP AMP, Comparator, Band gap References, Phase Locked Loop, Dynamic analog circuits, Data Converters, Switched Capacitor Circuits, Data Converters- Specifications, DAC, ADC Architecture

Expected outcome:

The students will be able to design and analyse various analog and digital CMOS circuits.

Text Books:

1. Phillip E. Allen, Douglas R. Holbery, CMOS Analog Circuit Design, Oxford, 2004.
2. Razavi B., Fundamentals of Microelectronics, Wiley student Edition2014.

References:

1. Baker, Li, Boyce, CMOS: Circuits Design, Layout and Simulation, Prentice Hall India
2. Razavi B., Design of Analog CMOS Integrated Circuits, Mc Graw Hill, 2001.

KTU STUDENTS

Course Plan

Module	Course contents	Hours	End Sem. Exam Marks
I	**CMOS Amplifiers-** Common Source with diode connected loads and current source load, CS stage with source degeneration, CG stage and Source Follower (Only Voltage Gain and Output impedance of circuits)	4	15%
	Cascoded stages - Cascoded amplifier, Cascoded amplifier with cascoded loads , Folded cascode Amplifier	4	
II	**MOS Current Mirror-** Basic circuit, PMOS and NMOS current mirrors Current mirror copying circuits, MOSFET cascode current mirror circuits	3	15%
	Differential Amplifiers-Differential Amplifier with MOS current source Load, with cascaded load and with current mirror load, MOS telescopic cascode amplifier. (Only Voltage Gain and Output impedance of circuits)	4	
	FIRST INTERNAL EXAM		
III	**CMOS OP AMPS-** Two Stage Operational Amplifiers - Frequency compensation of OPAMPS, miller compensation,	3	15%

For more study materials visit www.ktustudents.in

NEHRU COLLEGE OF ENGINEERING & RESEARCH CENTRE
PRINCIPAL
Nehru College of Engineering and Research Centre
Pampady, Thiruvilwamala, Thrissur-680 597, Kerala

	Design of classical Two Stage OP AMP		
	Comparator- Characterization of a comparator-static and dynamic, A Two stage open loop comparator (analysis not required)	3	
IV	**Band gap References-** Supply Independent Biasing, Temperature independent references –band gap reference	5	15%
	Phase Locked Loop – Simple PLL ,Basic PLL Topology, Charge Pump PLL, Basic Charge Pump PLL	3	
SECOND INTERNAL EXAM			
V	**Dynamic analog circuits** – charge injection and capacitive feed through in MOS switch, Reduction technique	3	20%
	Switched Capacitor Circuits- sample and hold circuits, Switched Capacitor Integrator, Ladder filters	3	
VI	**Data Converters-** DAC Specifications-DNL, INL, latency, SNR, Dynamic Range ADC Specifications-Quantization error, Aliasing, SNR, Aperture error	4	20%
	DAC Architecture - Resistor String, Charge Scaling and Pipeline types. **ADC Architecture-** Flash and Pipe line types	3	
END SEMESTER EXAM			

KTU STUDENTS

Question Paper Pattern

The question paper shall consist of three parts. Part A covers modules I and II, Part B covers modules III and IV, and Part C covers modules V and VI. Each part has three questions uniformly covering the two modules and each question can have maximum four subdivisions. In each part, any two questions are to be answered. Mark patterns are as per the syllabus with 60% for theory and 40% for logical/numerical problems, derivation and proof.

Estd. 2014

NEHRU COLLEGE OF ENGINEERING & RESEARCH CENTRE

PRINCIPAL
Nehru College of
Engineering and Research Centre
Pampady, Thiruvilwamala, Thrissur Dt
Pin - 680 597, Kerala

KTU STUDENTS

COURSE CODE	COURSE NAME	L-T-P-C	YEAR OF INTRODUCTION
EC463	SPEECH AND AUDIO SIGNAL PROCESSING	3-0-0-3	2016

Prerequisite: EC301 Digital Signal Processing

Course objectives:

- To familiarize the basic mechanism of speech production and the basic concepts of methods for speech analysis and parametric representation of speech.
- To give an overall picture about various applications of speech processing
- To impart ideas of Perception of Sound, Psycho-acoustic analysis, Spatial Audio Perception and rendering.
- To introduce Audio Compression Schemes.

Syllabus: Speech production, Time domain analysis, Frequency domain analysis, Cepstral analysis, LPC analysis, Speech coding, Speech recognition, Speech enhancement, Text to speech conversion. Signal Processing Models of Audio Perception, Psycho-acoustic analysis, Spatial Audio Perception and rendering, Audio compression methods, Parametric Coding of Multi-channel audio, Transform coding of digital audio, audio quality analysis.

Expected outcome:

The students will be able to

i. Understand basic concepts of speech production, speech analysis, speech coding and parametric representation of speech and apply it in practical applications
ii. Develop systems for various applications of speech processing
iii. Learn Signal processing models of sound perception and application of perception models in audio signal processing.
iv. Implement audio compression algorithms and standards.

KTU STUDENTS

Text Books:

1. Douglas O'Shaughnessy, Speech Communications, Human and Machine, IEEE Press, Hardcover 2/e, 1999; ISBN: 0780334493.
2. Nelson Morgan and Ben Gold, Speech and Audio Signal Processing: Processing and Perception Speech and Music, July 1999, John Wiley & Sons, ISBN: 0471351547

References:

1. Donald G. Childers, Speech Processing and Synthesis Toolboxes, John Wiley & Sons, September 1999; ISBN: 0471349593
2. Rabiner and Juang, Fundamentals of Speech Recognition, Prentice Hall, 1994.
3. Rabiner and Schafer, Digital Processing of Speech Signals, Prentice Hall, 1978.
4. Thomas F. Quatieri, Discrete-Time Speech Signal Processing: Principles and Practice, Prentice Hall; ISBN: 013242942X; 1/e

Course Plan

Module	Course contents	Hours	End Sem. Exam Marks
I	Speech Production: Acoustic theory of speech production. Speech Analysis: Short-Time Speech Analysis, Time domain analysis (Short time energy, short time zero crossing Rate, ACF). Parametric representation of speech: AR Model, ARMA model. LPC Analysis (LPC model, Auto correlation method).	5	15%

NEHRU COLLEGE OF ENGINEERING & RESEARCH CENTRE THRISSUR

PRINCIPAL
Nehru College of Engineering and Research Centre

For more study materials>www.ktustudents.in

II	Frequency domain analysis (Filter Banks, STFT, Spectrogram), Cepstral Analysis, MFCC. Fundamentals of Speech recognition and Text-to-speech conversion	8	15%
FIRST INTERNAL EXAM			
III	Speech coding, speech enhancement, Speaker Verification, Language Identification	7	15%
IV	Signal Processing Models of Audio Perception: Basic anatomy of hearing System. Auditory Filter Banks, Psycho-acoustic analysis: Critical Band Structure, Absolute Threshold of Hearing, Simultaneous Masking, Temporal Masking, Quantization Noise Shaping, MPEG psycho-acoustic model.	6	15%
SECOND INTERNAL EXAM			
V	Audio compression methods: Sampling rate and bandwidth requirement for digital audio, Redundancy removal and perceptual irrelevancy removal, Transform coding of digital audio: MPEG2-AAC coding standard, MDCT and its properties, Pre-echo and pre-echo suppression, Loss less coding methods.	7	20%
VI	Spatial Audio Perception and rendering: The physical and psycho-acoustical basis of sound localization and space perception. Spatial audio standards. Audio quality analysis: Objective analysis methods- PEAQ, Subjective analysis methods- [illegible]	6	20%
END SEMESTER EXAM			

KTU STUDENTS

Question Paper Pattern

The question paper shall consist of three parts. Part A covers modules I and II, Part B covers modules III and IV, and Part C covers modules V and VI. Each part has three questions uniformly covering the two modules and each question can have maximum four subdivisions. In each part, any two questions are to be answered. Mark patterns are as per the syllabus with 50% for theory and 50% for logical/numerical problems, derivation and proof.

NEHRU COLLEGE OF ENGINEERING & RESEARCH CENTRE
Thiruvilwamala (Thrissur Dt.)

PRINCIPAL
Nehru College of
Engineering and Research Centre
Pampady, Thiruvilwamala, Thrissur Dt
Pin 680 597 Kerala

For more study materials>www.ktustudents.in

COURSE CODE	COURSE NAME	L-T-P-C	YEAR OF INTRODUCTION
EC464	LOW POWER VLSI	3-0-0 -3	2016

Prerequisite: EC 304 VLSI, EC308 Embedded Systems

Course objectives:

- To identify the power dissipation mechanisms in various MOS logic styles
- To familiarize suitable techniques to reduce power dissipation

Syllabus:

Physics of Power dissipation in MOSFET devices, Sources of power dissipation in CMOS, Circuit techniques for leakage power reduction, Design and test of low voltage CMOS, Non clocked circuit design style, Adiabatic switching.

Expected outcome:

The students will be able to:

i. Identify the sources of power dissipation in digital IC systems.
ii. Understand the impact of power on system performance and reliability
iii. Understand leakage sources and reduction techniques
iv. Recognise advanced issues in VLSI systems, specific to the deep-submicron silicon technologies
v. Identify the mechanisms of power dissipation in CMOS integrated circuits

Text Books:

1. Gray Yeap, Practical low power digital VLSI design, Springer, 1998
2. Kaushik Roy, Sharat C Prasad, Low power CMOS VLSI circuit design, Wiley India, 2000

References:

1. Abdellatif Bellaouar, Mohamed I Elmasry, Low power digital VLSI design, Kluwer Academic, 1995
2. Anatha P Chandrakasan, Robert W Brodersen, Low power digital CMOS Design, Kluwer Academic, 1995
3. Christian Piguet, Low power CMOS circuits, Taylor & Francis, 2006
4. Kiat Seng Yeo, Kaushik Roy, Low voltage, low power VLSI sub systems, Tata McGraw Hill, 2004

Course Plan

Module	Course contents	Hours	End Sem. Exam Marks
I	**Physics of Power dissipation in MOSFET devices** MIS structure, Need for low power circuit design	2	15%
	Threshold voltage, body effects,	1	
	Short channel effects-surface scattering, punch through, velocity saturation, impact ionization	2	
	Hot electron effects, drain induced barrier lowering, narrow width effects	2	
II	**Sources of power dissipation in CMOS**-Switching power dissipation,	2	15%
	Short circuit power dissipation, glitching power dissipation	2	
	Leakage [illegible]	3	

KTU STUDENTS
For more study materials follow us at ktustudents.in

	deep submicron transistors		
FIRST INTERNAL EXAM			
III	**Circuit techniques for leakage power reduction** – standby leakage control using transistor stacks	2	15%
	multiple V_{th} techniques, Dynamic V_{th} techniques	2	
	supply voltage scaling techniques, Deep submicron devices design issues	2	
	Minimizing short channel effect	2	
IV	**Design and test of low voltage CMOS** – Circuit design style-clocked design style- Basic concept	2	15%
	Domino logic (domino NAND gate)	1	
	Differential Current Switch Logic.	2	
SECOND INTERNAL EXAM			
V	**Non clocked circuit design style**-fully complementary logic	2	20%
	NMOS and pseudo –NMOS logic	2	
	differential cascade voltage switch logic(DCVS),	2	
	pass transistor logic	2	
VI	**Adiabatic switching** – Adiabatic charging, adiabatic amplification	2	20%
	One stage and two stage adiabatic buffer	2	
	fully adiabatic system	1	
	Adiabatic logic gates, pulsed power supplies	2	
END SEMESTER EXAM			

KTU STUDENTS

Question Paper Pattern

The question paper shall consist of three parts. Part A covers modules I and II, Part B covers modules III and IV, and Part C covers modules V and VI. Each part has three questions uniformly covering the two modules and each question can have maximum four subdivisions. In each part, any two questions are to be answered. Mark patterns are as per the syllabus with 60% for theory and 40% for logical/numerical problems, derivation and proof.

NEHRU COLLEGE OF ENGINEERING & RESEARCH CENTRE
THIRUVILWAMALA
THRISSUR DT.

PRINCIPAL
Nehru College of
Engineering and Research Centre
Pampady, Thiruvilwamala, Thrissur Dt
Pin 680 597 Kerala

For more study materials>www.ktustudents.in

KTU Students

COURSE CODE	COURSE NAME	L-T-P-C	YEAR OF INTRODUCTION
EC465	MEMS	3-0-0 -3	2016

Prerequisite : NIL

Course objectives:

- To understand the operation of major classes of MEMS devices/systems
- To give the fundamentals of standard micro fabrication techniques and processes
- To understand the unique demands, environments and applications of MEMS devices

Syllabus:

MEMS and Microsystems applications, Review of Mechanical concepts, Actuation and Sensing techniques, Scaling laws in miniaturization, Materials for MEMS, Micro System fabrication techniques, Micro manufacturing, Micro system Packaging, Bonding techniques for MEMS, Overview of MEMS areas.

Expected outcome:

The student will be able to:

i. Understand the working principles of micro sensors and actuators
ii. Understand the application of scaling laws in the design of micro systems
iii. Understand the typical materials used for fabrication of micro systems
iv. Understand the principles of standard micro fabrication techniques
v. Appreciate the challenges in the design and fabrication of Micro systems

Text Books:

1. Chang Liu, Foundations of MEMS, Pearson, 2012
2. Tai-Ran Hsu, MEMS and Microsystems Design and Manufacture, TMH, 2002

KTU STUDENTS

References:

1. Chang C Y and Sze S. M., VLSI Technology, McGraw-Hill, New York, 2000
2. Julian W Gardner, Microsensors: Principles and Applications, John Wiley & Sons, 1994
3. Mark Madou, Fundamentals of Micro fabrication, CRC Press, New York, 1997
4. Stephen D. Senturia, Microsystem design, Springer (India), 2006.
5. Thomas B. Jones, Electromechanics and MEMS, Cambridge University Press, 2001

Course Plan

Module	Course content (42hrs)	Hours	End Sem. Exam Marks
I	MEMS and Microsystems: Applications – Multidisciplinary nature of MEMS – principles and examples of Micro sensors and micro actuators – micro accelerometer –comb drives - Micro grippers – micro motors, micro valves, micro pumps, Shape Memory Alloys.	4	15%
	Review of Mechanical concepts: Stress, Strain, Modulus of Elasticity, yield strength, ultimate strength – General stress strain relations – compliance matrix. Overview of commonly used mechanical structures in MEMS - Beams, Cantilevers, Plates, Diaphragms – Typical applications		

NEHRU COLLEGE OF ENGINEERING & RESEARCH CENTRE THRISSUR
PRINCIPAL Nehru College of Engineering and Research Centre Thrissur

For more study materials>www.ktustudents.in

II	Flexural beams: Types of Beams, longitudinal strain under pure bending – Deflection of beams – Spring constant of cantilever – Intrinsic stresses	3	15%
	Actuation and Sensing techniques : Thermal sensors and actuators, Electrostatic sensors and actuators , Piezoelectric sensors and actuators, magnetic actuators	4	
FIRST INTERNAL EXAM			
III	Scaling laws in miniaturization - scaling in geometry, scaling in rigid body dynamics, Trimmer force scaling vector, scaling in electrostatic and electromagnetic forces, scaling in electricity and fluidic dynamics, scaling in heat conducting and heat convection.	5	15%
IV	Materials for MEMS – Silicon – Silicon compounds – Silicon Nitride, Silicon Dioxide, Silicon carbide, Poly Silicon, GaAs , Silicon Piezo resistors,	4	
	Polymers in MEMS – SU-8, PMMA, PDMS, Langmuir – Blodgett Films, Micro System fabrication – Photolithography – Ion implantation- Diffusion – Oxidation – Chemicalvapour deposition – Etching	5	15%
SECOND INTERNAL EXAM			
V	Overview of Micro manufacturing – Bulk micro manufacturing, Surface micro machining , LIGA process –Microstereo lithography	6	20%
	Micro system Packaging: general considerations in packaging design – Levels of Micro system packaging	3	
VI	Bonding techniques in MEMS : Surface bonding , Anodic bonding , Silicon - on - Insulator , wire bonding , Sealing , Assembly of micro systems	3	20%
	Overview of MEMS areas : RF MEMS, BioMEMS, MOEMS, NEMS	2	
END SEMESTER EXAM			

KTU STUDENTS

Question Paper Pattern

The question paper shall consist of three parts. Part A covers modules I and II, Part B covers modules III and IV, and Part C covers modules V and VI. Each part has three questions uniformly covering the two modules and each question can have maximum four subdivisions. In each part, any two questions are to be answered. Mark patterns are as per the syllabus with 70% for theory and 30% for logical/numerical problems, derivation and proof.

NEHRU COLLEGE OF ENGINEERING & RESEARCH CENTRE
THRISSUR DT.

PRINCIPAL
Nehru College of
Engineering and Research Centre
Pambady, Thiruvilwamala, Thrissur Dt.
Pin 680 597 Kerala

For more study materials>www.ktustudents.in

KTU Students

COURSE CODE	COURSE NAME	L-T-P-C	YEAR OF INTRODUCTION
EC467	PATTERN RECOGNITION	3-0-0-3	2016

Prerequisite: NIL

Course objectives:

- To introduce the fundamental algorithms for pattern recognition
- To instigate the various classification and clustering techniques

Syllabus: Review of Probability Theory and Probability distributions, Introduction to Pattern Recognition and its applications, Bayesian decision theory, Bayesian estimation: Gaussian distribution, ML estimation, EM algorithm, Supervised and unsupervised learning, Feature selection, Linear Discriminant Functions, Non-parametric methods, Hidden Markov models for sequential data classification, Linear models for regression and classification, Clustering

Expected outcome:

The students will be able to

i. Design and construct a pattern recognition system
ii. Know the major approaches in statistical and syntactic pattern recognition.
iii. Become aware of the theoretical issues involved in pattern recognition system design such as the curse of dimensionality.
iv. Implement pattern recognition techniques

Text Books

1. C M Bishop, Pattern Recognition and Machine Learning, Springer
2. R O Duda, P.E. Hart and D.G. Stork, Pattern Classification and scene analysis, John Wiley

KTU STUDENTS

References

1. Morton Nadier and Eric Smith P., Pattern Recognition Engineering, John Wiley & Sons, New York, 1993.
2. Robert J. Schalkoff, Pattern Recognition : Statistical, Structural and Neural Approaches, John Wiley & Sons Inc., New York, 2007.
3. S.Theodoridis and K. Koutroumbas, Pattern Recognition, 4/e, Academic Press, 2009.
4. Tom Mitchell, Machine Learning, McGraw-Hill
5. Tou and Gonzales, Pattern Recognition Principles, Wesley Publication Company, London, 1974.

Course Plan

Module	Course content	Hours	End Sem Exam Marks
I	**Introduction:** Basics of pattern recognition system, various applications, Machine Perception, classification of pattern recognition systems	3	15%
	Design of Pattern recognition system, Pattern recognition Life Cycle	2	

NEHRU COLLEGE OF ENGINEERING & RESEARCH CENTRE THIRUVILWAMALA THRISSUR-DT

PRINCIPAL
Nehru College of Engineering and Research Centre

For more study materials>www.ktustudents.in

	Statistical Pattern Recognition: Review of probability theory, Gaussian distribution, Bayes decision theory and Classifiers, Optimal solutions for minimum error and minimum risk criteria, Normal density and discriminant functions, Decision surfaces	4	
II	Parameter estimation methods: Maximum-Likelihood estimation, Expectation-maximization method, Bayesian parameter estimation	2	15%
	Concept of feature extraction and dimensionality, Curse of dimensionality, Dimension reduction methods - Fisher discriminant analysis, Principal component analysis Hidden Markov Models (HMM) basic concepts, Gaussian mixture models.	6	
	FIRST INTERNAL EXAM		
III	Non-Parameter methods: Non-parametric techniques for density estimation - Parzen-window method, K-Nearest Neighbour method.	3	15%
	Non-metric methods for pattern classification: Non-numeric data or nominal data Decision trees: Concept of construction, splitting of nodes, choosing of attributes, overfitting, pruning	3	
IV	Linear Discriminant based algorithm: Perceptron, Support Vector Machines	5	15%
	SECOND INTERNAL EXAM		
	Multilayer perceptrons, Back Propagation algorithm, Artificial Neural networks		
	Classifier Ensembles: Bagging, Boosting / AdaBoost		20%
VI	Unsupervised learning: Clustering - Criterion functions for clustering, Algorithms for clustering: K-means and Hierarchical methods, Cluster validation	5	20%
	END SEMESTER EXAM		

KTU NOTES

Question Paper Pattern

The question paper shall consist of three parts. Part A covers modules I and II, Part B covers modules III and IV, and Part C covers modules V and VI. Each part has three questions uniformly covering the two modules and each question can have maximum four subdivisions. In each part, any two questions are to be answered. Mark patterns are as per the syllabus with 70% for theory and 30% for logical/numerical problems, derivation and proof.

NEHRU COLLEGE OF ENGINEERING & RESEARCH CENTRE

PRINCIPAL
Nehru College of
Engineering and Research Centre
Pampady, Thiruvilwamala, Thrissur Dt.
Pin - 680 597, Kerala

For more study materials>www.ktustudents.in

KTU STUDENTS

COURSE CODE	COURSE NAME	L-T-P-C	YEAR OF INTRODUCTION
EC468	SECURE COMMUNICATION	3-0-0 -3	2016

Prerequisite: EC407 COMPUTER COMMUNICATION

Course objectives:

•To impart the students about the theory and technology behind the secure communication.

Syllabus:

Introduction on Security, Security Goals, Types of Attacks, Modular arithmetic: Groups, Ring, Fields. The Euclidean algorithm, Finite fields of the form GF(p), Polynomial arithmetic, Symmetric Ciphers, Symmetric Cipher Model, Substitution Techniques, Transposition techniques, Block Ciphers, Data encryption Standards, Differential and Linear Crypt analysis Advanced Encryption standard, The AES Cipher, Public key cryptosystem, RSA algorithm, Intruders, Password management

Expected outcome:

The student will be

i. Exposed to the different approaches that handle security and the algorithms in use for maintaining data integrity and authenticity.
ii. Enabled student to appreciate the practical aspects of security features design and their implementation

Text Books:

1. Behrouz A. Forouzan , Cryptography and Network security Tata McGraw-Hill, 2008
2. William Stallings, Cryptography and Network security: principles and practice", 2nd Edition, Prentice Hall of India, New Delhi, 2002

References:

KTU STUDENTS

1. David S. Dummit & Richard M. Foote, Abstract Algebra, 2nd Edition, Wiley India Pvt Ltd, 2008
2. Douglas A. Stinson, Cryptography, Theory and Practice, 2/e, Chapman & Hall, CRC Press Company, Washington, 2005.
3. Lawrence C. Washington, Elliptic Curves: Theory and Cryptography, Chapman & Hall, CRC Press Company, Washington, 2008.
4. N. Koeblitz: A course in Number theory and Cryptography, 2008
5. Thomas Koshy: Elementary Number Theory with Applications, 2/e, Academic Press, 2007
6. Tyagi and Yadav , Cryptography and network security, Dhanpatrai, 2012

Course Plan

Module	Course contents	Hours	End Sem. Exam Marks
I	Introduction on security, security goals and types of attacks: Passive attack, active attack, attacks on confidentiality, attacks on integrity and availability, Security services and mechanisms.	5	15%
II	Modular arithmetic: Groups, Ring, Fields. The Euclidean algorithm, Finite fields of the form GF(p)	4	15%
	Polynomial arithmetic: Finite fields of the form GF (2n).	4	
FIRST INTERNAL EXAM			
III	Symmetric Ciphers, Symmetric Cipher Model	3	15%

PRINCIPAL
Nehru College of Engineering and Research Centre
Pampady, Thiruvilwamala, Thrissur (Dt)
Pin - 680 588, Kerala
NEHRU COLLEGE OF ENGINEERING & RESEARCH CENTRE THIRUVILWAMALA

For more study materials>www.ktustudents.in

	Substitution Techniques, Caesar Cipher, Mono alphabetic Cipher, Play fair cipher, Hill cipher, Poly alphabetic Cipher, one time pad	4	
IV	Transposition techniques ,Block Ciphers, Data encryption Standards, DES Encryption, DES decryption	3	15%
	Differential and Linear Crypt analysis Advanced Encryption standard	2	
	The AES Cipher, substitute bytes transformation, Shift row transformation, Mix Column transformation.	2	
SECOND INTERNAL EXAM			
V	Public key cryptosystem, Application for Public key cryptosystem requirements	2	20%
	RSA algorithm, Key management, Distribution of public key, public key certificates, Distribution of secret keys.	5	
VI	Intruders: Intrusion techniques, Intrusion detection, Statistical anomaly detection, Rule based intrusion detection, Distributed intrusion detection, Honey pot, Intrusion detection exchange format.	5	20%
	Password management: Password protection, password selection strategies.	2	
END SEMESTER EXAM			

Question Paper Pattern

KTU STUDENTS

[illegible] paper shall consist of [illegible] modules [illegible] Part [illegible] modules III and IV, and Part C covers modules V and VI. Each part has three questions uniformly covering the two modules and each question can have maximum four subdivisions. In each part, any two questions are to be answered. Mark patterns are as per the syllabus with 50% for theory and 50% for logical/numerical problems, derivation and proof.

NEHRU COLLEGE OF ENGINEERING & RESEARCH CENTRE
THIRUVILWAMALA THRISSUR-DT

PRINCIPAL
Nehru College of
Engineering and Research Centre
Pampady, Thiruvilwamala, Thrissur Dt
Pin - 68[illegible]

For more study materials>www.ktustudents.in

COURSE CODE	COURSE NAME	L-T-P-C	YEAR OF INTRODUCTION
EC365	Biomedical Engineering	3-0-0-3	2015

Prerequisite: Nil

Course objectives:
The purpose of this course is:
1. To introduce student to basic biomedical engineering technology
2. To understand the anatomy & physiology of major systems of the body in designing equipment for medical treatments.
3. To impart knowledge about the principle and working of different types of bio-medical electronic equipment/devices.

Syllabus:
Human body-overview, Physiological systems of body, Measurement of physiological parameters, Assisting and therapeutic devices, Medical laboratory equipments, Telemetry in patient care, Patient safety, Medical imaging system

Expected outcome:
On completion of this course, the students will be able:
1. To understand diagnosis and therapy related equipments.
2. To understand the problem and identify the necessity of equipment for diagnosis and therapy.
3. To understand the importance of electronics engineering in medical field.
4. To understand the importance of telemetry in patient care

KTU STUDENTS

1. K S Kandpur, "Hand book of Biomedical instrumentation", Tata McGraw Hill 2nd e/d.
2. Leslie Cromwell, Fred J. Weibell, Erich A. Pfeiffer, Biomedical Instrumentation and Measurements, PHI, 2nd Edition, 2004

References:
1. J. J. Carr, "Introduction to Biomedical Equipment Technology", Pearson Education 4th e/d.
2. John G Webster, "Medical Instrumentation application and design", John Wiley 3rd e/d.
3. Richard Aston, "Principle of Biomedical Instrumentation and Measurement". Merrill Education/Prentice Hall.
4. Barbara Christe, Introduction to Biomedical Instrumentation, Cambridge University Press, 2008.

Course Plan

Module	Course content	Hours	Sem. Exam Marks
I	Introduction to bio-medical instrumentation system, overview of anatomy and physiological systems of the body.	1	15
	Sources of bio-electric potential: Resting and action potential, propagation of action potentials. Bioelectric potentials examples (ECG, EEG, EMG, ERG, EOG, EGG, etc introduction only.)	2	
	Electrode theory: Nernst relation Bio potential electrodes: Microelectrodes, skin surface electrodes, needle electrodes.	1	

PRINCIPAL
Nehru College of
Engineering and Research Centre
Pambady, Thiruvilwamala, Thrissur (Dt)
Pin - 680 587, Kerala

For more study materials>www.ktustudents.in

	Instrumentation for clinical laboratory: Bio potential amplifiers-instrumentation amplifiers, carrier amplifiers, isolation amplifiers, chopper amplifiers	2	
II	Heart and cardiovascular system (brief discussion), electro conduction system of the heart. Electrocardiography, ECG machine block diagram, ECG lead configurations, ECG recording system, Einthoven triangle, analysis of ECG signals.	3	15
	Measurement of blood pressure: Direct, indirect and relative methods of blood pressure measurement, auscultatory method, oscillometric and ultrasonic non-invasive pressure measurements.	2	
	Measurement of blood flow: Electromagnetic blood flow meters and ultrasonic blood flow meters.	2	
FIRST INTERNAL EXAM			
III	The human nervous system. Neuron, action potential of brain, brain waves, types of electrodes, placement of electrodes, evoked potential, EEG recording, analysis of EEG.	2	15
	Electromyography: Nerve conduction velocity, instrumentation system for EMG.	1	
	Physiology of respiratory system (brief discussion), Respiratory parameters, spirometer, body plethysmographs, gas exchange and distribution.	2	
	Instruments for clinical laboratory: Colorimeters, pH meter, blood cell counter, flame photometer, spectrophotometer	3	
IV	Therapeutic Equipments: Principle, block schematic diagram, working and applications of : pacemakers, cardiac defibrillators, heart–lung machine, dialyzers, surgical diathermy equipment, ventilators	6	15
SECOND INTERNAL EXAM			
V	Medical Imaging systems (Basic Principle only): X-ray imaging - Properties and production of X-rays, X-ray machine, applications of X-rays in medicine.	2	20
	Computed Tomograpy: Principle, image reconstruction, scanning system and applications.	2	
	Ultrasonic imaging systems: Basic pulse echo system, propagation of ultrasonic through tissues and reflections, display types, A-Scan, B-Scan, M-Scan, applications, real-time ultrasonic imaging systems and probes.	3	
VI	Magnetic Resonance Imaging – Basic NMR components, Biological effects and advantages of NMR imaging	3	20
	Biomedical Telemetry system: Components of biotelemetry system, application of telemetry in medicine, single channel telemetry system for ECG and temperature	2	

KTU STUDENTS

PRINCIPAL
Nehru College of Engineering and Research Centre

For more study materials>www.ktustudents.in

	Patient Safety: Electric shock hazards, leakage current, safety codes for electro medical equipments	1	
END SEMESTER EXAM			

Question Paper

The question paper shall consist of three parts. Part A covers I and II module, Part B covers III and IV module, Part C covers V and VI module. Each part has three questions which may have maximum four subdivisions. Among the three questions one will be a compulsory question covering both modules and the remaining from each module, of which one to be answered. Mark patterns are as per the syllabus with 100 % for theory.

KTU STUDENTS

NEHRU COLLEGE OF ENGINEERING RESEARCH CENTRE THIRUVILWAMALA

PRINCIPAL
Nehru College of
Engineering and Research Centre
Pampady, Thiruvilwamala, Thrissur Dt
Pin 680 597 Kerala

For more study materials>www.ktustudents.in

FIRST INTERNAL EXAM			
III	Hazards – static and dynamic hazards – essential	1	**15**
	Design of Hazard free circuits – Data synchronizers	1	
	Mixed operating mode asynchronous circuits	1	
	Practical issues- clock skew and jitter	1	
	Synchronous and asynchronous inputs – switch bouncing	2	
IV	Fault table method – path sensitization method – Boolean difference method	2	**15**
	Kohavi algorithm	2	
	Automatic test pattern generation – Built in Self Test(BIST)	3	
SECOND INTERNAL EXAM			
V	PLA Minimization - PLA folding	2	**20**
	Foldable compatibility Matrix- Practical PLA	2	
	Fault model in PLA	1	
	Test generation and Testable PLA Design.	3	
VI	CPLDs and FPGAs - Xilinx XC 9500 CPLD family, functional block diagram– input output block architecture - switch matrix	3	**20**
	FPGAs – Xilinx XC 4000 FPGA family – configurable logic block - input output block, Programmable interconnect	3	
END SEMESTER EXAM			

KTU STUDENTS

Question Paper Pattern

The question paper consists of three parts. Part A covers modules I and II, Part B covers modules III and IV and Part C covers modules V and VI. Each part has three questions. Each question has a maximum of four subparts. Among the three questions one will be a compulsory question covering both the modules and the remaining two questions will be as one question from each module, of which one is to be answered. Mark pattern is according to the syllabus with 50 % for theory, derivation, proof and 50% for logical/numerical problems.

NEHRU COLLEGE OF ENGINEERING & RESEARCH CENTRE THRISSUR

PRINCIPAL
Nehru College of
Engineering and Research Centre
Pampady, Thiruvilwamala, Thrissur
Pin

For more study materials>www.ktustudents.in

COURSE CODE	COURSE NAME	L-T-P-C	YEAR OF INTRODUCTION
EC 361	DIGITAL SYSTEM DESIGN	3-0-0-3	2015

Prerequisite: EC207 Logic Circuit Design

Course objectives:
The purpose of this course is:
5. To study synthesis and design of CSSN
6. To study synthesis and design of ASC
7. To study hazards and design hazard free circuits
8. To study PLA folding
9. To study architecture of one CPLDs and FPGA family

Syllabus:
Clocked synchronous networks, asynchronous sequential circuits, Hazards, Faults, PLA, CPLDs and FPGA

Expected outcome:
The student should able:
1. To analyze and design clocked synchronous sequential circuits
2. To analyze and design asynchronous sequential circuits
3. To apply their knowledge in diagnosing faults in digital circuits, PLA
4. To interpret architecture of CPLDs and FPGA

Text Books:
1. Donald G Givone, Digital Principles & Design, Tata McGraw Hill, 2003
2. John M Yarbrough, Digital Logic Applications and Design, Thomson Learning
3. John F Wakerly, Digital Design, Pearson Education, Delhi 2002

References:
1. Richard E. Haskell, Darrin M. Hanna, Introduction to Digital Design Using Digilent FPGA Boards, LBE Books- LLC
2. N. N. Biswas, Logic Design Theory, PHI
3. Miron Abramovici, Melvin A. Breuer and Arthur D. Friedman, Digital Systems Testing and Testable Design, John Wiley & Sons Inc.
4. Z. Kohavi, Switching and Finite Automata Theory, 2nd ed., 2001, TMH
5. Morris Mano, M.D.Ciletti, Digital Design, 5th Edition, PHI.
6. Samuel C. Lee, Digital Circuits and Logic Design, PHI

KTU STUDENTS

Course Plan

Module	Course content	Hours	Sem. Exam Marks
I	Analysis of clocked Synchronous Sequential Networks(CSSN)	2	15
	Modelling of CSSN – State assignment and reduction	1	
	Design of CSSN	2	
	Iterative circuits	1	
	ASM Chart and its realization	2	
	Analysis of Asynchronous Sequential Circuits (ASC)	2	15
	Flow table reduction- Races in ASC	1	
	State assignment problem and the transition table- Design of AS	2	
	Design of Vending Machine controller.	2	

NEHRU COLLEGE OF ENGINEERING AND RESEARCH CENTRE
PRINCIPAL
Nehru College of Engineering and Research Centre
Pampady, Thiruvilwamala, Thrissur Dt
Pin-680597, Kerala

For more study materials>www.ktustudents.in

COURSE CODE	COURSE NAME	L-T-P-C	YEAR OF INTRODUCTION
EC 305	Microprocessor & Microcontroller	2-1-0 -3	2015

Prerequisite: EC207 Logic Circuit Design

Course objectives:

The purpose of this course is:

1. To understand fundamental operating concepts of microprocessors and microcontrollers.
2. To communicate with various devices using controller.
3. To design a microcontroller based system with the help of the interfacing devices.
4. To program the controller to make various peripherals work for specified application.

Syllabus:

Microprocessors: 8085 architecture and its operation, microprocessor initiated operations and bus organization, pin configuration and functions, generation of control signals for external operations- fetch, IO/M, read/write, machine cycles and bus timings. Addressing modes, instruction set, instruction classification. Overview/concept of peripheral IC interfacing with 8085 microprocessor (8251, 8253, 8255, 8279). Simple examples in assembly language programming for 8085 (only for internal examination). Introduction to development tools: IDE, cross assembler, builder, linker and debugger.(not required for exam). Introduction to 8086 and comparison between 8086,80286,80386,80486 and Pentium.

Microcontrollers: 8051- features, architecture, memory organization, registers, I/O ports, pin configuration and functions. Addressing modes, instruction set, instruction classification. Assembly language programming. Interrupts in 8051. Timer/Counter programming: Operating modes, time delay generation, Waveform generation. Serial communication: RS 232 interface, registers in UART, modes of operation, programming examples for serial data transmission and reception. Interfacing of DIP switches, stepper motor, ADC, DAC, LEDs and seven segment displays, alphanumeric LCD module with 8051.

KTU STUDENTS

Expected outcome:

The student should be able to:

1. Distinguish various types of processor architectures.
2. Describe architectures, memory organization of 8085 microprocessor and 8051.
3. Develop programming skills in assembly for interfacing peripheral devices with 8051

Text Books:

1. Ramesh S. Goankar. 8085 Microprocessors Archiecture Application and Programming. Penram International, 5/e.
2. Kenneth J. Ayala, The 8051 Microcontroller, Cengage learning, 3/e.
3. Lyla B.Das : Microprocessors and Microcontrollers, Pearson Education, India, 2011

PRINCIPAL
Nehru College of
Engineering and Research Centre
Pampady, Thiruvilwamala, Thrissur (Dt)
Pin 680 597 Kerala

For more study materials>www.ktustudents.in

References:

1. Soumitra Kumar Mandal. Microprocessors and Microcontrollers Architecture, Programming & Interfacing Using 8085, 8086 and 8051, McGraw Hill Education (2011).
2. Nagoorkani, Microprocessors and Microcontrollers 2e, McGraw Hill Education India, 2012.
3. Aditya P Mathur, Introduction to Microprocessor. Tata Mc Graw – Hill
4. Muhammed Ali Mazidi, The 8051 Microcontroller and Embedded Systems, Pearson Education, 2nd edition
5. I.Scott Mackenzie, Raphel C.-W Phan, The 8051 microcontroller, 4th edition.
6. Han Way Hung, "PIC Microcontroller, An introduction to software and hardware interfacing ", Cenage learning.
7. Muhammad Ali Mazidi " PIC Microcontroller and Embedded systems using assembly and C for PIC 18" Pearson.

Course Plan

Module	Course content	Hours	Sem. Exam Marks
I	Microprocessors: Introduction, organization of a microprocessor based system, evolution of microprocessors, 8085 architecture and its operation, microprocessor initiated operations and bus organization, pin configuration and functions, generation of control signals for external operations- fetch, IO/M, read/write.	5	15
II	Machine cycles and bus timings, Addressing modes, instruction set, instruction classification	[illegible]	15
	Overview/concept of peripheral IC interfacing with 8085 microprocessor (8251, 8253, 8255, 8279).	3	
	Simple examples in assembly language programming for 8085 (only for internal examination)	2	0
	Introduction to development tools: IDE, cross assembler, builder, linker and debugger.(not required for exam)	3	
	FIRST INTERNAL EXAM		
III	Introduction to 8086 and comparison between 8086,80286,80386,80486 and Pentium	2	15
	Microcontrollers: Introduction, comparison between microprocessors and microcontrollers, microcontroller families, 8051- features, architecture, memory organization, registers, I/O ports, pin configuration and functions.	6	
IV	Addressing modes, instruction set, instruction classification.	2	15
	Assembly language programming examples for 8051.	3	
	SECOND INTERNAL EXAM		
	Interrupts in 8051: Types, interrupt source, interrupt handling and programming	2	20
	Timer/Counter programming: Operating modes, time delay generation, Waveform generation.	2	

PRINCIPAL
Nehru College of Engineering and Research Centre
Pambady, Thiruvilwamala, Thrissur Dt
Pin - 680 587, Kerala

For more study materials>www.ktustudents.in

	Serial communication: RS 232 interface, registers in UART, modes of operation, programming examples for serial data transmission and reception	2	
VI	Interfacing: Interfacing (block schematic and assembly language programming) of DIP switch, stepper motor, ADC, DAC, LEDs and seven segment displays, alphanumeric LCD module with 8051.	6	20
END SEMESTER EXAM			

Question Paper Pattern

The question paper consists of three parts. Part A covers modules I and II, Part B covers modules III and IV and Part C covers modules V and VI. Each part has three questions. Each question has a maximum of four subparts. Among the three questions one will be a compulsory question covering both the modules and the remaining two questions will be as one question from each module, of which one is to be answered. Mark pattern is according to the syllabus with 80 % for theory and 20% for logical/numerical problems and programming.

KTU STUDENTS

NEHRU COLLEGE OF ENGINEERING & RESEARCH CENTRE
Principal
Thiruvilwamala
Thrissur Dt

PRINCIPAL
Nehru College of
Engineering and Research Centre
Pampady, Thiruvilwamala, Thrissur Dt
Pin 680 597 Kerala

For more study materials>www.ktustudents.in

COURSE CODE	COURSE NAME	L-T-P-C	YEAR OF INTRODUCTION
EC 303	Applied Electromagnetic Theory	3-0-0-3	2015

Prerequisite: MA201 Linear Algebra & Complex Analysis, MA 101Calculus, MA 102 Differential equations

Course objectives:

The purpose of this course is:

1. To introduce basic mathematical concepts related to electromagnetic vector fields.
2. To impart knowledge on the basic concepts of electric and magnetic fields
3. To develop a solid foundation in the analysis and application of electromagnetic fields, Maxwell's equations and Poynting theorem.
4. To become familiar with propagation of signal through transmission lines and waveguides.

Syllabus:

Co-ordinate transformation, vector algebra, vector calculus, electrostatics, magneto statics, Maxwell's equations, Boundary condition, Solution of wave equation, propagation of plane EM wave in different media, Poynting vector theorem, transmission lines, Smith chart, Waveguides.

Expected outcome:

At the end of the course, students shall be able:

1. To develop a solid foundation and a fresh perspective in the analysis and application of electromagnetic fields.
2. To analyse the propagation of electromagnetic waves in different media.
3. To analyze the characteristics of transmission lines.
4. To solve different transmission line problems using Smith chart
5. To understand the different modes of propagation in waveguides

KTU STUDENTS

Text Books:

1. Mathew N O Sadiku, Elements of Electromagnetics, Oxford University Press, 6/e, 2014.
2. William, H., Jf Hayt, and John A. Buck. Engineering Electromagnetics. McGraw-Hill, 8/e McGraw-Hill, 2014.
3. John D. Kraus, Electromagnetics, 5/e, TMH, 2010.

References:

1. Joseph A Edminister , Electromagnetics, Schaum's Outline Series McGraw Hill, 4/e, 1995
2. Nannapaneni Narayana Rao, Elements of Engineering Electromagnetics, Pearson, 6/e, 2006.
3. Umran S. Inan and Aziz S. Inan, Engineering Electromagnetics, Pearson, 2010.
4. Martin A Plonus , Applied Electromagnetics, McGraw Hill, 2/e,1978.
5. Jordan and Balmain , Electromagnetic waves and Radiating Systems, PHI, 2/e,2013
6. Matthew N.O. Sadiku & S.V. Kulkarni "'Principles of Electromagnetics', Oxford University Press Inc. Sixth Edition, Asian Edition,2015

NEHRU COLLEGE OF ENGINEERING AND RESEARCH CENTRE

PRINCIPAL
Nehru College of
Engineering and Research Centre

For more study materials>www.ktustudents.in

Course Plan			
Module	**Course content**	**Hours**	**Sem. Exam Marks**
I	Review of vector calculus, Spherical and Cylindrical coordinate system, Coordinate transformation	1	0
	Curl, Divergence, Gradient in spherical and cylindrical coordinate system.	1	
	Electric field – Application of Coulomb's law, Gauss law and Amperes current law (proof not required, simple problems only)	1	15
	Poisson and Laplace equations (proof not required, simple problems only), Determination of E and V using Laplace equation.	1	
	Derivation of capacitance and inductance of two wire transmission line and coaxial cable. Energy stored in Electric and Magnetic field.	2	
	Displacement current density, continuity equation. Magnetic vector potential. Relation between scalar potential and vector potential.	2	
II	Maxwell's equation from fundamental laws.	1	15
	Boundary condition of electric field and magnetic field from Maxwell's equations	1	
	Solution of wave equation	1	
	Propagation of plane EM waves in free space, dielectric medium, good conductor, media-attenuation, phase velocity, group velocity, skin depth.	3	
FIRST INTERNAL EXAM			
III	Reflection and refraction of plane electromagnetic waves at boundaries for normal & oblique incidence (parallel and perpendicular polarization), Snell's law of refraction, Brewster angle.	4	15
	Power density of EM wave, Poynting vector theorem, Complex Poynting vector.	3	
	Polarization of electromagnetic wave-linear, circular and elliptical polarisation.	2	
IV	Uniform lossless transmission line - line parameters	1	15
	Transmission line equations, Voltage and Current distribution of a line terminated with load	2	
	Reflection coefficient and VSWR. Derivation of input impedance of transmission line.	2	
SECOND INTERNAL EXAM			
	Transmission line as circuit elements (L and C).	2	20
	Half wave and quarter wave transmission lines.	1	
	Development of Smith chart - calculation of line impedance and VSWR using smith chart.	2	
	Single stub matching (Smith chart and analytical method).	2	

KTU STUDENTS

NEHRU COLLEGE OF ENGINEERING & RESEARCH CENTRE
PRINCIPAL
Nehru College of
Engineering and Research Centre
Pampady, Thiruvilwamala, Thrissur

For more study materials>www.ktustudents.in

VI	Parallel-Plate Waveguide - TE & TM waves.	1	20
	The hollow rectangular wave guide – modes of propagation of wave- dominant mode, group velocity and phase velocity -derivation and simple problems only.	3	
	Attenuation in wave guides, guide wavelength and impedance -derivation and simple problems only .	3	
END SEMESTER EXAM			

Question Paper

The question paper shall consist of three parts. Part A covers I and II module, Part B covers III and IV module, Part C covers V and VI module. Each part has three questions, which may have maximum four subdivisions. Among the three questions, one will be a compulsory question covering both modules and the remaining from each module, of which one to be answered. Mark patterns are as per the syllabus with 50 % for theory and 50% for logical/numerical problems, derivation and proof.

KTU STUDENTS

NEHRU COLLEGE OF ENGINEERING & RESEARCH CENTRE

PRINCIPAL
Nehru College of
Engineering and Research Centre
Pampady, Thiruvilwamala, Thrissur
Pin 680 597 Kerala

For more study materials>www.ktustudents.in

COURSE CODE	COURSE NAME	L-T-P-C	YEAR OF INTRODUCTION
EC 301	Digital Signal Processing	3-1-0-4	2015

Prerequisite: EC 202 Signals & Systems

Course objectives:

The purpose of this course is:

1. To provide an understanding of Digital Signal Processing principles, algorithms and applications
2. To study the design techniques for digital filters
3. To give an understanding of Multi-rate Signal Processing and its applications
4. To introduce the architecture of DSP processors

Syllabus

Discrete Fourier Transform and its Properties, Linear Filtering methods based on the DFT, Frequency analysis of signals using the DFT, Introduction to DCT and properties, Computation of DFT, FFT Algorithms, IDFT computation using Radix-2 FFT Algorithms, DFT Computation using Radix-4 FFT Algorithms, Efficient computation of DFT of two real sequences and a 2N-Point real sequence, Design of FIR Filters, Design of linear phase FIR Filters using window methods and frequency sampling method, Design of IIR Digital Filters from Analog Filters, IIR Filter Design, Frequency Transformations, FIR Filter Structures, IIR Filter Structures, Introduction to TMS320C67xx digital signal processor, Multi-rate Digital Signal Processing, Finite word length effects in DSP systems, IIR digital filters, FFT algorithms.

Expected outcome:

After the course, the student will understand the principle of digital signal processing and applications. The utilization of DSP to electronics engineering will be illustrated.

KTU STUDENTS

Text Books:

1. Oppenheim A. V., Schafer R. W. and Buck J. R., Discrete Time Signal Processing, 3/e, Prentice Hall, 2007.
2. Proakis J. G. and Manolakis D. G., Digital Signal Processing, 4/e, Pearson Education, 2007.

References:

1. Lyons, Richard G., Understanding Digital Signal Processing, 3/e. Pearson Education India, 2004.
2. Ifeachor E.C. and Jervis B. W., Digital Signal Processing: A Practical Approach, 2/e, Pearson Education, 2009.
3. Mitra S. K., Digital Signal Processing: A Computer Based Approach, 4/e McGraw Hill (India), 2014.
4. Salivahanan, Digital Signal Processing,3e, Mc Graw –Hill Education New Delhi, 2014 (Smart book)
5. Chassaing, Rulph., DSP applications using C and the TMS320C6x DSK. Vol. 13. John Wiley & Sons, 2003.
6. NagoorKani, Digital Signal Processing, 2e, Mc Graw –Hill Education New Delhi, 2013
7. Singh A., Srinivasan S., Digital Signal Processing: Implementation Using DSP Microprocessors, Cenage Learning, 2012.

NEHRU COLLEGE OF ENGINEERING & RESEARCH CENTRE
THRISSUR

PRINCIPAL
Nehru College of
Engineering and Research Centre
Pampady, Thiruvilwamala, Thrissur Dt
Pin 680 597 Kerala

For more study materials>www.ktustudents.in

Course Plan			
Module	**Course content**	**Hours**	**Sem. Exam Marks**
I	The Discrete Fourier Transform: DFT as a linear transformation, Relationship of the DFT to other transforms, IDFT	2	15
	Properties of DFT and examples Circular convolution	4	
	Linear Filtering methods based on the DFT- linear convolution using circular convolution, overlap save and overlap add methods	3	
	Frequency Analysis of Signals using the DFT	2	
II	Computation of DFT: Radix-2 Decimation in Time and Decimation in Frequency FFT Algorithms	3	15
	IDFT computation using Radix-2 FFT Algorithms	2	
	Efficient computation of DFT of Two Real Sequences and a 2N-Point Real Sequence	2	
FIRST INTERNAL EXAM			
III	Design of FIR Filters- Symmetric and Anti-symmetric FIR Filters	2	15
	Design of linear phase FIR Filters using Window methods (rectangular, Hamming and Hanning) and frequency sampling Method	6	
	Comparison of Design Methods for Linear Phase FIR Filters	1	
IV	Design of IIR Digital Filters from Analog Filters (Butterworth)	4	15
	IIR Filter Design by Impulse Invariance, and Bilinear Transformation	3	
	Frequency Transformations in the Analog and Digital Domain	2	
SECOND INTERNAL EXAM			
V	Block diagram and signal flow graph representations of filters	1	20
	FIR Filter Structures: (Linear structures), Direct Form, Cascade Form and Lattice Structure	3	
	IIR Filter Structures: Direct Form, Transposed Form, Cascade Form and Parallel Form	2	
	Computational Complexity of Digital filter structures	1	
	Computer architecture for signal processing : Introduction to TMS320C67xx digital signal processor	2	
VI	Multi-rate Digital Signal Processing: Decimation and Interpolation (Time domain and Frequency Domain Interpretation without proof)	3	20
	Finite word length effects in DSP systems: Introduction (analysis not required), fixed-point and floating-point DSP arithmetic, ADC quantization noise	2	
	Finite word length effects in IIR digital filters: coefficient quantization errors	2	

KTU STUDENT

PRINCIPAL
Nehru College of
Engineering and Research Centre
Pampady, Thiruvilwamala, Thrissur Dt
Pin 680 597 Kerala

For more study materials>www.ktustudents.in

	Finite word length effects in FFT algorithms: Round off. errors	2	.
END SEMESTER EXAM			-

Question Paper

The question paper shall consist of three parts. Part A covers I and II module, Part B covers III and IV module, Part C covers V and VI module. Each part has three questions, which may have maximum four subdivisions. Among the three questions, one will be a compulsory question covering both modules and the remaining from each module, of which one to be answered. Mark patterns are as per the syllabus with 40 % for theory and 60% for logical/numerical problems, derivation and proof.

KTU STUDENTS

NEHRU COLLEGE OF ENGINEERING RESEARCH CENTRE THIRUVILWAMALA THRISSUR

PRINCIPAL
Nehru College of
Engineering and Research Centre
Thiruvilwamala, Thrissur
Pin 680 687 Kerala

For more study materials>www.ktustudents.in

www.ktustudents.in

	its effect on input and output impedance, Feedback amplifier circuits in each feedback topologies (no analysis required)		
	Oscillators & Tuned Amplifiers: Classification of oscillators, Barkhausen criterion, Analysis of RC phase shift and Wien bridge oscillators, Working of Hartley, Colpitts and Crystal oscillators; Tuned amplifiers, synchronous and stagger tuning	6	
SECOND INTERNAL EXAM			
V	Power amplifiers: Classification, Transformer coupled class A power amplifier, push pull class B and class AB power amplifiers, efficiency and distortion, Transformer-less class B and Class AB power amplifiers, Class C power amplifier (no analysis required)	6	**20**
	Switching Circuits: Simple sweep circuit, Bootstrap sweep circuit, Astable, Bistable, and Monostable multivibrators, Schmitt Trigger	5	
VI	Transistor based voltage regulator: Design and analysis of shunt and series voltage regulator, load and line regulation, Short circuit protection	4	**20**
	MOSFET amplifiers: Biasing of MOSFET amplifier, DC analysis of single stage MOSFET amplifier, small signal equivalent circuit. Small signal voltage and current gain, input and output impedances of CS configuration, MOSFETCascade amplifier	5	
END SEMESTER EXAM			

Question Paper Pattern

The question paper consists of three parts. Part A covers modules I and II, Part B covers modules III and IV and Part C covers modules V and VI. Each part has three questions. Each question can have a maximum of four subparts. Among the three questions one will be a compulsory question covering both the modules and the remaining two questions will be as one question from each module, of which one is to be answered. Mark pattern is according to the syllabus with maximum 60 % for theory, derivation, proof and 40% for logical/numerical problems.

NEHRU COLLEGE OF ENGINEERING & RESEARCH CENTRE
Pampady
THIRUVILWAMALA
THRISSUR

PRINCIPAL
Nehru College of
Engineering and Research Centre
Pampady, Thiruvilwamala, Thrissur Dt
Pin 680 597 Kerala

www.ktustudents.in

COURSE CODE	COURSE NAME	L-T-P-C	YEAR OF INTRODUCTION
EC201	NETWORK THEORY	3-1-0-4	2016

Prerequisite: Nil

Course objectives:

- To make the students capable of analyzing any linear time invariant electrical network.
- To study time domain, phasor and Laplace transform methods of linear circuit analysis.
- To study the transient response of networks subject to test signals.
- To develop understanding of the concept of resonance, coupled circuits and two port networks.

Syllabus:

Circuit variables and Circuit elements, Kirchhoff's laws, Network topology, Mesh and node analysis of network, Laplace transform, Inverse Laplace transform, Solution of differential equations by using Laplace transforms, Transient analysis of RL, RC, and RLC networks, Network functions for the single port and two ports, Parameters of two-port network, Resonance, Coupled circuits

Expected outcome:

At the end of the course students will be able to analyze the linear time invariant electrical circuits.

Text Books

1. Ravish R., Network Analysis and Synthesis, 2/e, McGraw-Hill, 2015.
2. Valkenburg V., Network Analysis, 3/e, PHI, 2011.

References:

1. Sudhakar A,S. P. Shyammohan, Circuits and Networks- Analysis and Synthesis, 5/e, McGraw-Hill, 2015.
2. Choudhary R., Networks and Systems, 2/e, New Age International, 2013.
3. Franklin F. Kuo, Network Analysis and Synthesis, 2/e, Wiley India, 2012.
4. Pandey S. K., Fundamentals of Network Analysis and Synthesis, 1/e, S. Chand, 2012.
5. Edminister, Electric Circuits – Schaum's Outline Series, McGraw-Hill,2009.

Course Plan

Module	Course content (48 hrs)	Hours	Sem. Exam Marks (%)
I	Introduction to circuit variables and circuit elements ,Review of Kirchhoff's Laws, Independent and dependent Sources, Source transformations	3	15
	Network topology, Network graphs, Trees, Incidence matrix, Tie-set matrix and Cut-set matrix	2	
	Solution methods applied to dc and phasor circuits: Mesh and node analysis of network containing independent and dependent sources	3	
II	Network theorems applied to dc and phasor circuits: Thevenin's theorem, Norton's theorem, Superposition theorem, Reciprocity theorem, Millman's theorem, Maximum power transfer theorem	6	15

NEHRU COLLEGE OF ENGINEERING & RESEARCH CENTRE
Pampady
Thiruvilwamala
Thrissur Dt

Downloaded from Ktunotes.in

PRINCIPAL
Nehru College of
Engineering and Research Centre
Pampady, Thiruvilwamala, Thrissur Dt
Pin 680 597 Kerala

	Laplace transform, properties Laplace Transforms and inverse Laplace transform of common functions, Important theorems: Time shifting theorem, Frequency shifting theorem, Time differentiation theorem, Time integration theorem, s domain differentiation theorem, s domain integration theorem, Initial value theorem, Final value theorem	4	
	FIRST INTERNAL EXAM		
III	Partial Fraction expansions for inverse Laplace transforms, Solution of differential equations using Laplace transforms	3	**15**
	Transformation of basic signals and circuits into s-domain	2	
	Transient analysis of RL, RC, and RLC networks with impulse, step, pulse, exponential and sinusoidal inputs	3	
	Analysis of networks with transformed impedance and dependent sources.	3	
IV	Network functions for the single port and two ports, properties of driving point and transfer functions, Poles and Zeros of network functions, Significance of Poles and Zeros	3	**15**
	Time domain response from pole zero plot, Impulse Response	1	
	Network functions in the sinusoidal steady state, Magnitude and Phase response	3	
	SECOND INTERNAL EXAM		
V	Parameters of two port network: impedance, admittance, transmission and hybrid parameters, Interrelationship among parameter sets	5	**20**
	Series and parallel connections of two port networks	2	
	Reciprocal and Symmetrical two port network	2	
	Characteristic impedance, Image impedance and propagation constant (derivation not required)	2	
VI	Resonance: Series resonance, bandwidth, Q factor and Selectivity, Parallel resonance	3	**20**
	Coupled circuits: single tuned and double tuned circuits, dot convention, coefficient of coupling, Analysis of coupled circuits	4	
	END SEMESTER EXAM		

Question Paper Pattern (End Sem Exam)

Maximum Marks: 100 **Time : 3 hours**

The question paper shall consist of three parts. Part A covers modules I and II, Part B covers modules III and IV, and Part C covers modules V and VI. Each part has three questions uniformly covering the two modules and each question can have maximum four subdivisions. In each part, any two questions are to be answered. Mark pattern is according to the syllabus with maximum 30% for theory and 70% for logical/numerical problems, derivation and proof.

NEHRU COLLEGE OF ENGINEERING & RESEARCH CENTRE
THIRUVILWAMALA, THRISSUR DT

PRINCIPAL
Nehru College of Engineering and Research Centre
Pampady, Thiruvilwamala, Thrissur Dt
Pin 680 597 Kerala

Downloaded from Ktunotes.in

Course code	Course Name	L-T-P - Credits	Year of Introduction
EC202	SIGNALS & SYSTEMS	3-1-0 -4	2016

Prerequisite: Nil

Course Objectives

1. To train students for an intermediate level of fluency with signals and systems in both continuous time and discrete time, in preparation for more advanced subjects in digital signal processing, image processing, communication theory and control systems.
2. To study continuous and discrete-time signals and systems, their properties and representations and methods those are necessary for the analysis of continuous and discrete-time signals and systems.
3. To familiarize with techniques suitable for analyzing and synthesizing both continuous-time and discrete time systems.
4. To gain knowledge of time-domain representation and analysis concepts as they relate to differential equations, difference equations, impulse response and convolution, etc.
5. To study frequency-domain representation and analysis concepts using Fourier analysis tools, Laplace Transform and Z-transform.

   To study concepts of the sampling process, reconstruction of signals and interpolation.

Syllabus

Elementary signals, Continuous time and Discrete time signals and systems, Signal operations, Differential equation representation, Difference equation representation, Continuous time LTI Systems, Discrete time LTI Systems, Correlation between signals, Orthogonality of signals, Frequency domain representation, Continuous time Fourier series, Continuous time Fourier transform, Laplace transform, Inverse Laplace transform, Unilateral Laplace transform, Transfer function, Frequency response, Sampling, Aliasing, Z transform, Inverse Z transform, Unilateral Z transform, Frequency domain representation of discrete time signals, Discrete time Fourier series and discrete time Fourier transform (DTFT), Analysis of discrete time LTI systems using the above transforms

Expected outcome .

The student will be able to:

i. Define, represent, classify and characterize basic properties of continuous and discrete time signals and systems.
ii. Represent the CT signals in Fourier series and interpret the properties of Fourier transform and Laplace transform
iii. Outline the relation between convolutions, correlation and to describe the orthoganality of signals.
iv. Illustrate the concept of transfer function and determine the magnitude and phase response of LTI systems.
v. Explain sampling theorem and techniques for sampling and reconstruction.
vi. Determine z transforms, inverse z transforms and analyze LTI systems using z transform.

Text Book:

1. Alan V. Oppenheim and Alan Willsky, Signals and Systems, PHI, 2/e, 2009
2. Simon Haykin, Signals & Systems, John Wiley, 2/e, 2003

References:

1. Anand Kumar, Signals and Systems, PHI, 3/e, 2013.
2. B P. Lathi, Priciples of Signal Processing & Linear systems, Oxford University Press.
3. Gurung, Signals and System, PHI.
4. Mahmood Nahvi, Signals and System, Mc Graw Hill (India), 2015.
5. P Ramakrishna Rao, Shankar Prakriya, Signals and System, MC Graw Hill Edn 2013.

NEHRU COLLEGE OF ENGINEERING & RESEARCH CENTRE THIRUVILWAMALA THRISSUR DT

PRINCIPAL
Nehru College of
Engineering and Research Centre
Pampady, Thiruvilwamala, Thrissur Dt
Pin 680 597 Kerala

6. Rodger E. Ziemer, Signals & Systems - Continuous and Discrete, Pearson, 4/e, 2013			
Course Plan			
Module	**Contents**	**Hours**	**Sem. Exam Marks**
I	Elementary Signals, Classification and representation of continuous time and discrete time signals, Signal operations	4	15%
	Continuous time and discrete time systems - Classification, Properties.	3	
	Representation of systems: Differential equation representation of continuous time systems. Difference equation representation of discrete systems.	2	
II	Continuous time LTI systems and convolution integral.	3	15%
	Discrete time LTI systems and linear convolution.	2	
	Stability and causality of LTI systems.	2	
	Correlation between signals, Orthoganality of signals.	2	
FIRST INTERNAL EXAMINATION			
III	Frequency domain representation of continuous time signals-continuous time Fourier series and its properties.	4	15%
	Convergence, Continuous time fourier transform and its properties.	3	
	Laplace Transform, ROC, Inverse transform, properties, unilateral Laplace transform.	3	
	Relation between Fourier and Laplace transforms.	1	
IV	Analysis of LTI systems using Laplace and Fourier transforms. Concept of transfer function, Frequency response, Magnitude and phase response.	4	15%
	Sampling of continuous time signals, Sampling theorem for lowpass signals, aliasing.	3	
SECOND INTERNAL EXAMINATION			
V	Z transform, ROC , Inverse transform, properties, Unilateral Z transform.	4	20%
	Frequency domain representation of discrete time signals, Discrete time fourier series and its properties.	4	
	Discrete time fourier transform (DTFT) and its properties	4	
VI	Relation between DTFT and Z-Transform, Analysis of discrete time LTI systems using Z transforms and DTFT, Transfer function, Magnitude and phase response.	6	20%
END SEMESTER EXAM			

Assignment: Convolution by graphical methods, Solution of differential equations.
Project: Use of Matlab in finding various transforms: magnitude and phase responses.

Question Paper Pattern (End Sem Exam)

Maximum Marks: 100 **Time : 3 hours**

The question paper shall consist of three parts. Part A covers modules I and II, Part B covers modules III and IV, and Part C covers modules V and VI. Each part has three questions uniformly covering the two modules and each question can have maximum four subdivisions. In each part, any two questions are to be answered. Mark pattern is according to the syllabus with maximum 30 % for theory and 70% for logical/numerical problems, derivation and proof.

NEHRU COLLEGE OF ENGINEERING & RESEARCH CENTRE THIRUVILWAMALA THRISSUR DT

PRINCIPAL
Nehru College of
Engineering and Research Centre
Pampady Thiruvilwamala Thrissur Dt
Pin 680 597 Kerala

Course code	Course Name	L-T-P - Credits	Year of Introduction
EC204	ANALOG INTEGRATED CIRCUITS	4-0-0-4	2016

Prerequisite: Nil

Course Objectives

- To equip the students with a sound understanding of fundamental concepts of operational amplifiers
- To understand the wide range of applications of operational amplifiers
- To introduce special function integrated circuits
  To introduce the basic concepts and types of data converters

Syllabus

Differential amplifier configurations, Operational amplifiers, Block diagram, Ideal op-amp parameters, Effect of finite open loop gain, bandwidth and slew rate on circuit performance, op-amp applications-linear and nonlinear, Active filters, Specialized ICs and their applications, Monolithic Voltage Regulators - types and its applications, Data converters - specifications and types.

Expected outcome .

The students will

i. have a thorough understanding of operational amplifiers
ii. be able to design circuits using operational amplifiers for various applications

Text Books:

1. Franco S., Design with Operational Amplifiers and Analog Integrated Circuits, 3/e, Tata McGraw Hill, 2008
2. Salivahanan S. ,V. S. K. Bhaaskaran, Linear Integrated Circuits, Tata McGraw Hill, 2008

References:

1. Botkar K. R., Integrated Circuits, 10/e, Khanna Publishers, 2010
2. C.G. Clayton, Operational Amplifiers, Butterworth & Company Publ. Ltd. Elsevier, 1971
3. David A. Bell, Operational Amplifiers & Linear ICs, Oxford University Press, 2nd edition, 2010
4. Gayakwad R. A., Op-Amps and Linear Integrated Circuits, Prentice Hall, 4/e, 2010
5. R.F. Coughlin & Fredrick Driscoll, Operational Amplifiers & Linear Integrated Circuits, 6th Edition, PHI,2001
6. Roy D. C. and S. B. Jain, Linear Integrated Circuits, New Age International, 3/e, 2010
7. Sedra A. S. and K. C. Smith, Microelectronic Circuits, 6/e, Oxford University Press, 2013

Course Plan

Module	Contents	Hours	Sem. Exam Marks
I	Differential amplifiers: Differential amplifier configurations using BJT, Large and small signal operations, Input resistance, Voltage gain, CMRR, Non-ideal characteristics of differential amplifier. Frequency response of differential amplifiers, Current sources, Active load, Concept of current mirror circuits, Wilson current mirror circuits (Analysis using hybrid 'pi' model only).	6	15%
	Operational amplifiers: Introduction, Block diagram, Ideal op-amp parameters, Equivalent circuit, Voltage transfer curve, Open loop op-amp configurations, Effect of finite open loop gain, Bandwidth and slew rate on circuit performance	5	
II	Op-amp with negative feedback: Introduction, Feedback	3	15%

NEHRU COLLEGE OF ENGINEERING & RESEARCH CENTRE Pampady THIRUVILWAMALA THRISSUR DT

PRINCIPAL
Nehru College of
Engineering and Research Centre
Pampady Thiruvilwamala, Thrissur Dt
Pin 680 597 Kerala

	configurations, Voltage series feedback, Voltage shunt feedback, Properties of practical op-amp.		
	Op-amp applications: Inverting and non inverting amplifier, DC and AC amplifiers, Summing, Scaling and averaging amplifiers, Instrumentation amplifier.	4	
FIRST INTERNAL EXAMINATION			
III	Op-amp applications: Voltage to current converter, Current to voltage converter, Integrator, Differentiator, Precision rectifiers, Log and antilog amplifier, Phase shift and Wien bridge oscillators	7	15%
IV	Astable and monostable multivibrators, Triangular and saw tooth wave generators, Comparators, Zero crossing detector, Schmitt trigger	5	15%
	Active filters: Advantages, First and second order low pass, High pass, Band pass and band reject filters, Design of filters using Butterworth approximations	5	
SECOND INTERNAL EXAMINATION			
V	Specialized ICs and its applications: Timer IC 555 : Astable and monostable operations, applications. Analog Multipliers: Introduction, Gilbert multiplier cell. Voltage Controlled Oscillator IC AD633 and their applications.	3	20%
	Phase Locked Loop – Operation, Closed loop analysis, Lock and capture range, Basic building blocks, PLL IC 565, Applications of PLL for AM & FM detection and Frequency multiplication, Frequency division, Frequency synthesizing.	4	
	Monolithic Voltage Regulators - Fixed voltage regulators, 78XX and 79XX series, Adjustable voltage regulators, IC 723 – Low voltage and high voltage configurations, Current boosting, Current limiting, Short circuit and Fold-back protection.	4	
VI	Data Converters: D/A converter, Specifications, Weighted resistor type, R-2R Ladder type.	3	20%
	A/D Converters: Specifications, Classification, Flash type, Counter ramp type, Successive approximation type, Single slope type, Dual slope type, Sample-and-hold circuits.	5	
END SEMESTER EXAM			

Assignment

1. Explain the importance of frequency compensated networks in opamps and the commonly used compensation techniques.
2. Write short notes on commercially available integrated circuits (Opamp, ADC, DAC, VCO, Analog multiplier, PLL) with pin outs and their important features

Question Paper Pattern (End Sem Exam)

Maximum Marks: 100 **Time : 3 hours**

The question paper shall consist of three parts. Part A covers modules I and II, Part B covers modules III and IV, and Part C covers modules V and VI. Each part has three questions uniformly covering the two modules and each question can have maximum four subdivisions. In each part, any two questions are to be answered. Mark patterns are as per the syllabus with maximum60 % for theory and 40% for logical/numerical problems, derivation and proof.

PRINCIPAL
Nehru College of
Engineering and Research Centre
Chiruvilwamala, Thrissur Dt
Pin 680 597, Kerala

www.ktustudents.in

COURSE CODE	COURSE NAME	L-T-P-C	YEAR OF INTRODUCTION
EC205	ELECTRONIC CIRCUITS	3-1-0-4	2016

Prerequisite: Nil

Course objectives:

- To develop the skill of analysis and design of various analog circuits using discrete electronic devices as per the specifications.

Syllabus:

High pass and low pass RC circuits, Differentiator, Integrator, Analysis of BJT biasing circuits, small signal analysis of transistor configurations using small signal hybrid π model, low frequency and high frequency analysis of BJT amplifiers, Cascade amplifiers, Wide band amplifiers, Feedback amplifiers, Oscillators, Tuned amplifiers, Power amplifiers, Sweep circuits and multivibrators, transistor voltage regulator, DC analysis of MOSFET circuits, small signal equivalent circuit, Small signal analysis of MOSFET amplifier circuits, Analysis of multistage MOSFET amplifiers

Expected outcome:

- At the end of the course, students will be able to analyse and design the different electronic circuits using discrete electronic components.

Text Books:

- Sedra A. S. and K. C. Smith, Microelectronic Circuits, 6/e, Oxford University Press, 2013
- Millman J. and C. Halkias, Integrated Electronics, 2/e, McGraw-Hill, 2010

References:

1. Neamen D., Electronic Circuits - Analysis and Design, 3/e, TMH, 2007
2. Rashid M. H., Microelectronic Circuits - Analysis and Design, Cengage Learning, 2/e, 2011
3. Spencer R. R. and M. S. Ghausi, Introduction to Electronic Circuit Design, Pearson, 2003
4. Razavi B., Fundamentals of Microelectronics, Wiley, 2015

Course Plan

Module	Course content (48 hrs)	Hours	Sem. Exam Marks
I	RC Circuits: Response of high pass and low pass RC circuits to sine, step, pulse and square wave inputs, Differentiator, Integrator	5	15
	BJT biasing circuits: Types, Q point, Bias stability, Stability factors, RC coupled amplifier and effect of various components, Concept of DC and AC load lines, Fixing of operating point, Classification of amplifiers	5	
II	Small signal analysis of CE, CB and CC configurations using small signal hybrid π model (gain, input and output impedance). Small signal analysis of BJT amplifier circuits, Cascade amplifier	7	15
	FIRST INTERNAL EXAM		
III	High frequency equivalent circuits of BJT, Short circuit current gain, cutoff frequency, Miller effect, Analysis of high frequency response of CE, CB and CC amplifiers	4	15

NEHRU COLLEGE OF ENGINEERING & RESEARCH CENTRE
PAMPADY THIRUVILWAMALA THRISSUR-DT

www.ktustudents.in

PRINCIPAL
Nehru College of
Engineering and Research Centre
Pampady Thiruvilwamala Thrissur Dt
Pin 680 597 Kerala

	Wide band amplifier: Broad banding techniques, low frequency and high frequency compensation, Cascode amplifier.	4	
IV	Feedback amplifiers: Effect of positive and negative feedback on gain, frequency response and distortion, Feedback topologies and	3	15

PRINCIPAL
Nehru College of
Engineering and Research Centre
Panipady Thiruvilwamala, Thrissur Dt
Pin 680 597 Kerala

NEHRU COLLEGE OF ENGINEERING & RESEARCH CENTRE
PANIPADY
THIRUVILWAMALA
THRISSUR DT

www.ktustudents.in

Course code	Course Name	L-T-P - Credits	Year of Introduction
EC206	COMPUTER ORGANISATION	3-0-0-3	2016

Prerequisite: EC207 Logic Circuit Design

Course Objectives

- To impart knowledge in computer architecture.
- To impart knowledge in machine language programming.
- To develop understanding on I/O accessing techniques and memory structures.

Syllabus

Functional units of a computer, Arithmetic circuits, Processor architecture, Instructions and addressing modes, Execution of program, Micro architecture design process, Design of data path and control units, I/O accessing techniques, Memory concepts, Memory interface, Cache and Virtual memory concepts.

Expected outcome .

The students will be able to:

i. Understand the functional units of a computer
ii. Identify the different types of instructions
iii. Understand the various addressing modes
iv. Understand the I/O addressing system
v. Categorize the different types of memories

Text Books:

1. David A. Patterson and John L. Hennessey, Computer Organisation and Design, Fourth Edition, Morgan Kaufmann
2. David Money Harris, Sarah L Harris, Digital Design and Computer Architecture,M Kaufmann – Elsevier, 2009

References

1. Carl Hamacher : "Computer Organization ", Fifth Edition, Mc Graw Hill
2. John P Hayes: "Computer Architecture and Organisation", Mc Graw Hill
3. William Stallings: "Computer Organisation and Architecture", Pearson Education
4. Andrew S Tanenbaum: "Structured Computer Organisation", Pearson Education
5. Craig Zacker: "PC Hardware : The Complete Reference", TMH

Course Plan

Module	Contents	Hours	Sem. Exam Marks
I	Functional units of a computer Arithmetic Circuits: Adder-carry propagate adder, Ripple carry adder, Basics of carry look ahead and prefix adder, Subtractor, Comparator, ALU	4	15%
	Shifters and rotators, Multiplication, Division	3	
	Number System: Review of Fixed point & Floating point number system	1	
II	Architecture : Assembly Language, Instructions, Operands, Registers, Register set, Memory, Constants	2	15%
	Machine Language: R-Type, I-Type, J-Type Instructions, Interpreting machine language code	3	
	FIRST INTERNAL EXAMINATION		
III	MIPS Addressing modes – Register only, Immediate, Base, PC-relative, Pseudo - direct	3	15%

NEHRU COLLEGE OF ENGINEERING AND RESEARCH CENTRE
THRISSUR DT

PRINCIPAL
Nehru College of
Engineering and Research Centre
Pampady Tiruvilwamala Thrissur Dt
Pin 680 597 Kerala

	MIPS memory map, Steps for executing a program - Compilation, Assembling, Linking, Loading	3	
	Pseudo instructions, Exceptions, Signed and Unsigned instructions, Floating point instructions	3	
IV	MIPS Microarchitectures – State elements of MIPS processor	1	15%
	Design process and performance analysis of Single cycle processor, Single cycle data path, Single cycle control for R – type arithmetic/logical instructions.	3	
	Design process and performance analysis of multi cycle processor, Multi cycle data path, Multi cycle control for R – type arithmetic/logical instructions.	3	
SECOND INTERNAL EXAMINATION			
V	I/O system – Accessing I/O devices, Modes of data transfer, Programmed I/O, Interrupt driven I/O, Direct Memory Access, Standard I/O interfaces – Serial port, Parallel port, PCI, SCSI, and USB.	3	20%
	Memory system – Hierarchy, Characteristics and Performance analysis, Semiconductor memories (RAM, ROM, EPROM), Memory Cells – SRAM and DRAM, internal organization of a memory chip, Organization of a memory unit.	4	
VI	Cache Memory – Concept/principle of cache memory, Cache size, mapping methods – direct, associated, set associated, Replacement algorithms. Write policy- Write through, Write back.	3	20%
	Virtual Memory – Memory management, Segmentation, Paging, Address translation, Page table, Translation look aside buffer.	3	
END SEMESTER EXAM			

Question Paper Pattern (End Sem Exam)

Maximum Marks: 100 **Time : 3 hours**

The question paper shall consist of three parts. Part A covers modules I and II, Part B covers modules III and IV, and Part C covers modules V and VI. Each part has three questions uniformly covering the two modules and each question can have maximum four subdivisions. In each part, any two questions are to be answered. Mark patterns are as per the syllabus with maximum80 % for theory and 20% for logical/numerical problems, derivation and proof.

NEHRU COLLEGE OF ENGINEERING & RESEARCH CENTRE
PAMPADY
THIRUVILWAMALA
THRISSUR-DT

PRINCIPAL
Nehru College of
Engineering and Research Centre
Pampady, Thiruvilwamala, Thrissur Dt
Pin 680 597 Kerala

www.ktustudents.in

COURSE CODE	COURSE NAME	L-T-P-C	YEAR OF INTRODUCTION
EC207	LOGIC CIRCUIT DESIGN	3-0-0-3	2016

Prerequisite:Nil

Course objectives:

- To work with a positional number systems and numeric representations
- To introduce basic postulates of Boolean algebra and show the correlation between Boolean expression
- To outline the formal procedures for the analysis and design of combinational circuits and sequential circuits
- To study the fundamentals of HDL
- To design and implement combinational circuits using basic programmable blocks
- To design and implement synchronous sequential circuits

Syllabus:

Positional Number Systems, Boolean algebra, Combinational Logic, HDL concepts ,Digital ICs, Programmable Logic Devices, Sequential Logic, Sequential Circuits

Expected outcome:

The student should able to:

1. Compare various positional number systems and binary codes
2. Apply Boolean algebra in logic circuit design
3. Design combinational and sequential circuits
4. Design and implement digital systems using basic programmable blocks
5. Formulate various digital systems using HDL

Text Books:

1. Donald D Givone, Digital Principles and Design, Tata McGraw Hill, 2003
2. John F Wakerly, Digital Design Principles and Practices, Pearson Prentice Hall, 2007

References:

1.Ronald J Tocci, Digital Systems, Pearson Education, 11th edition,2010
2.Thomas L Floyd, Digital Fundamentals, Pearson Education, 8th edition 2009
3.Moris Mano, Digital Design, Prentice Hall of India, 3rd edition, 2002
4.John M Yarbrough, Digital Logic Applications and Design, Cenage learning, 2009
5.David Money Harris, Sarah L Harris, Digital Design and Computer Architecture, Morgan Kaufmann – Elsevier, 2009

Course Plan

Module	Course content (42 hrs)	Hours	Sem. Exam Marks
I	Number systems- decimal, binary, octal, hexa decimal, base conversion	2	15
	1's and 2's complement, signed number representation Binary arithmetic, binary subtraction using 2's complement	2	
	Binary codes (grey, BCD and Excess-3), Error detection and correcting codes : Parity(odd, even), Hamming code (7,4), Alphanumeric codes : ASCII	2	

NEHRU COLLEGE OF ENGINEERING & RESEARCH CENTRE THIRUVILWAMALA THRISSUR

www.ktustudents.in

PRINCIPAL
Nehru College of
Engineering and Research Centre
Thiruvilwamala Thrissur Dt.
Kerala

II	Logic expressions, Boolean laws, Duality, De Morgan's law, Logic functions and gates	2	15
	Canonical forms: SOP, POS, Realisation of logic expressions using K-	2	

NEHRU COLLEGE OF ENGINEERING & RESEARCH CENTRE
PAMPADY
THIRUVILWAMALA
THRISSUR-DT

PRINCIPAL
Nehru College of
Engineering and Research Centre
Pampady, Thiruvilwamala, Thrissur Dt
Pin 680 597 Kerala

www.ktustudents.in

www.ktustudents.in

	map (2,3,4 variables)		
	Design of combinational circuits – adder, subtractor, 4 bit adder/subtractor, BCD adder, MUX, DEMUX, Decoder,BCD to 7 segment decoder, Encoder, Priority encoder, Comparator (2/3 bits)	4	
	FIRST INTERNAL EXAM		
III	Introduction to HDL : Logic descriptions using HDL, basics of modeling (only for assignments)	**2**	**0**
	Logic families and its characteristics: Logic levels, propagation delay, fan in, fan out, noise immunity , power dissipation, TTL subfamilies	1	**15**
	NAND in TTL (totem pole, open collector and tri-state), CMOS:NAND, NOR, and NOT in CMOS, Comparison of logic families (TTL,ECL,CMOS) in terms of fan-in, fan-out, supply voltage, propagation delay, logic voltage and current levels, power dissipation and noise margin	2	
	Programmable Logic devices - ROM, PLA, PAL, implementation of simple circuits using PLA	2	
IV	Sequential circuits - latch, flip flop (SR, JK, T, D), master slave JK FF, conversion of FFs, excitation table and characteristic equations	3	**15**
	Asynchronous and synchronous counter design, mod N counters, random sequence generator	5	
	SECOND INTERNAL EXAM		
V	Shift Registers - SIPO, SISO, PISO, PIPO, Shift registers with parallel LOAD/SHIFT Shift register counter - Ring Counter and Johnson Counter	3	**20**
	Mealy and Moore models, state machine ,notations, state diagram, state table, transition table, excitation table, state equations	3	
VI	Construction of state diagram – up down counter, sequence detector	3	**20**
	Synchronous sequential circuit design - State equivalence	2	
	State reduction – equivalence classes, implication chart	2	
	END SEMESTER EXAM		

Assignments:

1. Simple combinational circuit design using MUX,DEMUX, PLA & PAL
2. HDL simulation of circuits like simple ALU, up-down counter, linear feedback shift register, sequence generator

Question Paper Pattern

The question paper consists of three parts. Part A covers modules I and II, Part B covers modules III and IV and Part C covers modules V and VI. Each part has three questions. Each question have a maximum of four subparts. Among the three questions one will be a compulsory question covering both the modules and the remaining two questions will be as one question from each module, of which one is to be answered. Mark pattern is according to the syllabus with maximum 50 % for theory, derivation, proof and 50% for logical/numerical problems.

NEHRU COLLEGE OF ENGINEERING & RESEARCH CENTRE THIRUVILWAMALA THRISSUR DT

www.ktustudents.in

PRINCIPAL
Nehru College of
Engineering and Research Centre
Pampady Thiruvilwamala, Thrissur Dt
Pin 680 597 Kerala

Course code	Course Name	L-T-P - Credits	Year of Introduction
EC208	ANALOG COMMUNICATION ENGINEERING	3-0-0-3	2016

Prerequisite: EC205 Electronic Circuits

Course Objectives

- To study the concepts and types of modulation schemes.
- To study different types of radio transmitters and receivers.
- To study the effects of noise in analog communication systems.
  To impart basic knowledge on public telephone systems.

Syllabus

Elements of communication system, Need for modulation, Noises, Amplitude Modulation, Amplitude modulator circuits, Demodulator circuits, AM transmitters, Types of AM, Angle modulation: principles of frequency modulation, phase modulation, AM and FM Receivers, Frequency modulator circuits, FM transmitters, FM receiver, Noise in AM and FM systems, Public telephone systems, standard telephone set, cordless telephones.

Expected outcome .

The students will be able to:

i. understand the different analog modulation schemes.
ii. understand the fundamental ideas of noises and its effect in communication systems.
iii. explain the principle and working of analog transmitters and receivers.
iv. know the basic idea of telephone systems.

Text Books:

1. Dennis Roody and John Coolen, Electronic Communication, Pearson, 4/e, 2011.
2. George Kennedy, Electronic Communication Systems, McGrawHill, 4/e, 2008.
3. Tomasi, Electronic Communications System , Pearson, 5/e, 2011.

References:

1. Blake, Electronic Communication system, Cengage, 2/e, 2012.
2. Simon Haykin, Communication Systems, Wiley 4/e, 2006.
3. Taub, Schilling, Saha, Principles of communication system, McGraw Hill, 2013.
4. Tomasi, Advanced Electronic Communications Systems, Pearson, 6/e, 2012.

Course Plan

Module	Contents	Hours	Sem. Exam Marks
I	Introduction, Elements of communication systems, Need for modulation	2	15%
	Noise in communication system, Thermal noise (white noise), Shot noise, Partition noise, Flicker noise, Burst noise, Signal to noise ratio, Noise factor, Noise temperature, Narrow band noise.	3	
II	Amplitude modulation: Sinusoidal AM, Modulation index, Average power, Effective voltage and current, Nonsinusoidal modulation.	4	15%
	Amplitude modulator circuits, Amplitude demodulator circuits, AM transmitters, Noise in AM Systems.	5	
FIRST INTERNAL EXAMINATION			
III	Single Sideband Modulation: Principles, Balanced modulators, Singly & doubly balanced modulators, SSB generation, Filter method, Phasing method & Third method, SSB reception, Modified SSB systems, Pilot carrier SSB & ISB, Companded SSB.	6	15%

PRINCIPAL
Nehru College of
Engineering and Research Centre
Pampady, Thiruvilwamala, Thrissur Dt

IV	Angle modulation: Frequency modulation, Sinusoidal FM, Frequency spectrum, Modulation index, Average power, Non-sinusoidal modulation, Deviation ratio, Comparison of AM and FM.	4	15%
	AM & FM Receivers: Super heterodyne receiver, Tuning range, Tracking, Sensitivity and gain, Image rejection, Double conversion, Adjacent channel selectivity, Automatic Gain Control (AGC).	4	
SECOND INTERNAL EXAMINATION			
V	Phase modulation, Equivalence between PM and FM, Sinusoidal phase modulation, Digital phase modulation.	3	20%
	Angle modulator Circuits: Varactor diode modulators, Transistor modulators. FM Transmitters: Direct and Indirect Methods.	3	
VI	Angle modulation detectors, Slope detector, Balanced slope detector, Foster-Seeley discriminator, PLL demodulator, Automatic Frequency Control (AFC), Amplitude limiters, Noise in FM systems, Pre-emphasis and De-emphasis.	4	20%
	Telephone systems, standard telephone set, basic call procedures and tones, DTMF, cordless telephones.	4	
END SEMESTER EXAM			

Assignment

Study of

1. The telephone circuit - Local subscriber loop, Private-line circuits, Voice-frequency circuit arrangements.
2. The public telephone network - Instruments, Local loops, Trunk circuits and exchanges, Local central exchanges, Automated central office switches and exchanges.

Question Paper Pattern (End Sem Exam)

Maximum Marks: 100 **Time : 3 hours**

The question paper shall consist of three parts. Part A covers modules I and II, Part B covers modules III and IV, and Part C covers modules V and VI. Each part has three questions uniformly covering the two modules and each question can have maximum four subdivisions. In each part, any two questions are to be answered. Mark patterns are as per the syllabus with maximum 60 % for theory and 40% for logical/numerical problems, derivation and proof.

NEHRU COLLEGE OF ENGINEERING & RESEARCH CENTRE
Pampady
THIRUVILWAMALA
THRISSUR-DT

PRINCIPAL
Nehru College of
Engineering and Research Centre
Pampady Thiruvilwamala Thrissur Dt
Pin 680 597 Kerala

KTU Students

ELECTRONICS AND COMMUNICATION ENGINEERING

ECT 203	LOGIC CIRCUIT DESIGN	CATEGORY	L	T	P	CREDIT
		PCC	3	1	0	4

Preamble: This course aims to impart the basic knowledge of logic circuits and enable students to apply it to design a digital system.

Prerequisite: EST130 Basics of Electrical and Electronics Engineering

Course Outcomes: After the completion of the course the student will be able to

CO 1	Explain the elements of digital system abstractions such as digital representations of information, digital logic and Boolean algebra .
CO 2	Create an implementation of a combinational logic function described by a truth table using and/or/inv gates/ muxes
CO 3	Compare different types of logic families with respect to performance and efficiency
CO 4	Design a sequential logic circuit using the basic building blocks like flip-flops
CO 5	Design and analyze combinational and sequential logic circuits through gate level Verilog models.

Mapping of course outcomes with program outcomes

	PO 1	PO 2	PO 3	PO 4	PO 5	PO 6	PO 7	PO 8	PO 9	PO 10	PO 11	PO 12
CO 1	3	3										
CO 2	3	3	3									
CO 3	3	3										
CO 4	3	3	3									
CO 5	3	3	3		3							

Assessment Pattern

Bloom's Category	Continuous Assessment Tests		End Semester Examination
	1	2	
Remember	10	10	10
Understand	20	20	20
Apply	20	20	70
Analyse			
Evaluate			
Create			

Mark distribution

Total Marks	CIE	ESE	ESE Duration

PRINCIPAL
Nehru College of
Engineering and Research Centre
Pampady, Thiruvilwamala, Thrissur Dt
Pin - 680597, Kerala

Download Syllabus and Study Materials from WWW.KTUSTUDENTS.IN

150	50	100	3 hours

NEHRU COLLEGE OF ENGINEERING & RESEARCH CENTRE
PAMPADY
THIRUVILWAMALA
THRISSUR DT

PRINCIPAL
Nehru College of
Engineering and Research Centre
Pampady, Thiruvilwamala, Thrissur Dt
Pin - 680 597 Kerala

Download Syllabus and Study Materials from WWW.KTUSTUDENTS.IN

KTU Students

ELECTRONICS AND COMMUNICATION ENGINEERING

Continuous Internal Evaluation Pattern:

Attendance	: 10 marks
Continuous Assessment Test (2 numbers)	: 25 marks
Course project	: 15 marks

It is mandatory that a *course project* shall be undertaken by a student for this subject. The course project can be performed either as a hardware realization/simulation of a typical digital system using combinational or sequential logic. Instead of two assignments, two evaluations may be performed on the course project along with series tests, each carrying 5 marks. Upon successful completion of the project, a brief report shall be submitted by the student which shall be evaluated for 5 marks. The report has to be submitted for academic auditing. A few samples projects are given below:

Sample course projects:

1. M-Sequence Generator Psuedo random sequences are popularly used in wireless communication. A sequence generator is used to produce pseudo random codes that are useful in spread spectrum applications. Their generation relies on irreducible polynomials.A maximal length sequence generator that relies on the polynomial $P(D) = D^7 + D^3 + 1$, with each D represent delay of one clock cycle.

- An 8-bit shift register that is configured as a ring counter may be used realize the above equation.
- This circuit can be developed in verilog, simulated, synthesized and programmed into a tiny FPGA and tested in real time.
- Observe the M-sequnce from parallel outputs of shift register for one period . Count the number of 1s and zeros in one cycle.
- Count the number of runs of 1s in singles, pairs, quads etc. in the pattern.

2. BCD Subtractor

- Make 4 -bit parallel adder circuit in verilog.
- Make a one digit BCD subtracter in Verilog, synthesize and write into a tiny FPGA.
- Test the circuit with BCD inputs.

3. Digital Thermometer

- Develop a circuit with a temperature sensor and discrete components to measure and dispaly temperature.
- Solder the circuit on PCB and test it.

4. Electronic Display

- This display should receive the input from an alphanumeric keyboard and display it on an LCD diplay.
- The decoder and digital circuitry is to developed in Verilog and programmed into a tiny FPGA.

5. Electronic Roulette Wheel

- 32 LEDs are placed in a circle and numbered that resembles a roulette wheel.
- A 32-bit shift register generates a random bit pattern with a single 1 in it.
- When a push button is pressed the single 1 lights one LED randomly.
- Develop the shift register random pattern generator in verilog and implement on a tiny FPGA and test the circuit.

6. Three Bit Carry Look Ahead Adder

- Design the circuit of a three bit carry look ahead adder.
- Develop the verilog code for it and implement and test it on a tiny FPGA. item Compare the performance with a parallel adder.

PRINCIPAL
Nehru College of
Engineering and Research Centre
Pampady Thiruvilwamala
Pin 680 [illegible] Kerala

Download Syllabus and Study Materials from WWW.KTUSTUDENTS.IN

KTU Students

ELECTRONICS AND COMMUNICATION ENGINEERING

End Semester Examination Pattern: There will be two parts; Part A and Part B. Part A contain 10 questions with 2 questions from each module, having 3 marks for each question. Students should answer all questions. Part B contains 2 questions from each module of which student should answer any one. Each question can have maximum 2 sub-divisions and carry 14 marks. The questions on verlog modelling should not have a credit more than 25% of the whole mark.

Course Level Assessment Questions

Course Outcome 1 (CO1) : Number Systems and Codes

1. Consider the signed binary numbers A = 01000110 and B = 11010011 where B is in 2's complement form. Find the value of the following mathematical expression (i) A + B (ii) A – B
2. Perform the following operations (i)$D9CE_{16}$-$CFDA_{16}$ (ii) 6575_8-5732_8
3. Convert decimal 6,514 to both BCD and ASCII codes. For ASCII, an even parity bit is to be appended at the left.

Course Outcome 2 (CO2) : Boolean Postulates and combinational circuits

1. Design a magnitude comparator to compare two 2-bit numbers $A = A_1A_0$ and $B = B_1B_0B$
2. Simplify using K-map F(a,b,c,d) = Σ m (4,5,7,8,9,11,12,13,15)
3. Explain the operation of a 8x1 multiplexer and implement the following using an 8x1 multiplexer F(A, B, C, D) = Σ m (0, 1, 3, 5, 6, 7, 8, 9, 11, 13, 14)

Course Outcome 3 (CO3) : Logic families and its characteristics

1. Define the terms noise margin, propagation delay and power dissipation of logic families. Compare TTL and CMOS logic families showing the values of above mentioned terms.
2. Draw the circuit and explain the operation of a TTL NAND gate
3. Compare TTL, CMOS logic families in terms of fan-in, fan-out and supply voltage

Course Outcome 4 (CO4) : Sequential Logic Circuits

1. Realize a T flip-flop using NAND gates and explain the operation with truth table, excitation table and characteristic equation
2. Explain a MOD 6 asynchronous counter using JK Flip Flop
3. Draw the logic diagram of 3 bit PIPO shift register with LOAD/SHIFT control and explain its working

Course Outcome 5 (CO5) : Logic Circuit Design using HDL

1. Design a 4-to-1 mux using gate level Verilog model.
2. Design a verilog model for a hald adder circuit. Make a one bit full adder by connecting two half adder models.
3. Compare concurrent signal assignment versus sequential signal assignment.

Syllabus

Module 1: Number Systems and Codes:

PRINCIPAL
Nehru College of
Engineering and Research Centre
Pampady, Thiruvilwamala, Thrissur Dt
Pin 680 597 Kerala

Download Syllabus and Study Materials from WWW.KTUSTUDENTS.IN

KTU Students

Binary and hexadecimal number systems; Methods of base conversions; Binary and hexadecimal arithmetic; Representation of signed numbers; Fixed and floating point numbers; Binary coded decimal codes; Gray codes; Excess 3 code. Alphanumeric codes: ASCII. Basics of verilog -- basic language elements: identifiers, data objects, scalar data types, operators.

Module 2: Boolean Postulates and Fundamental Gates

Boolean postulates and laws – Logic Functions and Gates De-Morgan's Theorems, Principle of Duality, Minimization of Boolean expressions, Sum of Products (SOP), Product of Sums (POS), Canonical forms, Karnaugh map Minimization. Modeling in verilog, Implementation of gates with simple verilog codes.

Module 3: Combinatorial and Arithmetic Circuits

Combinatorial Logic Systems - Comparators, Multiplexers, Demultiplexers, Encoder, Decoder. Half and Full Adders, Subtractors, Serial and Parallel Adders, BCD Adder. Modeling and simulation of combinatorial circuits with verilog codes at the gate level.

Module 4: Sequential Logic Circuits:

Building blocks like S-R, JK and Master-Slave JK FF, Edge triggered FF, Conversion of Flipflops, Excitation table and characteristic equation. Implementation with verilog codes. Ripple and Synchronous counters and implementation in verilog, Shift registers-SIPO, SISO, PISO, PIPO. Shift Registers with parallel Load/Shift, Ring counter and Johnsons counter. Asynchronous and Synchronous counter design, Mod N counter. Modeling and simulation of flipflops and counters in verilog.

Module 5: Logic families and its characteristics:

TTL, ECL, CMOS - Electrical characteristics of logic gates – logic levels and noise margins, fan-out, propagation delay, transition time, power consumption and power-delay product. TTL inverter - circuit description and operation; CMOS inverter - circuit description and operation; Structure and operations of TTL and CMOS gates; NAND in TTL and CMOS, NAND and NOR in CMOS.

Text Books

1. Mano M.M., Ciletti M.D., "Digital Design", Pearson India, 4th Edition. 2006
2. D.V. Hall, "Digital Circuits and Systems", Tata McGraw Hill, 1989

PRINCIPAL
Nehru College of
Engineering and Research Centre
Pampady, Thiruvilwamala, Thrissur Dt
Pin 680 597 Kerala

Download Syllabus and Study Materials from WWW.KTUSTUDENTS.IN

KTU Students

3. S. Brown, Z. Vranesic, "Fundamentals of Digital Logic with Verilog Design", McGraw Hill

4. Samir Palnikar"Verilog HDL: A Guide to Digital Design and Syntheis", Sunsoft Press

5. R.P. Jain, "Modern digital Electronics", Tata McGraw Hill, 4th edition, 2009

Reference Books

1. W.H. Gothmann, "Digital Electronics – An introduction to theory and practice", PHI, 2nd edition ,2006
2. Wakerly J.F.,"Digital Design: Principles and Practices." Pearson India, 4th 2008
3. A. Ananthakumar ,"Fundamentals of Digital Circuits", Prentice Hall, 2nd edition, 2016
4. Fletcher, William I., An Engineering Approach to Digital Design, 1st Edition, Prentice Hall India, 1980

Course Contents and Lecture Schedule

No	Topic	No. of Lectures
1	**Number Systems and Codes:**	
1.1	Binary, octal and hexadecimal number systems; Methods of base conversions;	2
1.2	Binary, octal and hexadecimal arithmetic;	1
1.3	Representation of signed numbers; Fixed and floating point numbers;	3
1.4	Binary coded decimal codes; Gray codes; Excess 3 code :	1
1.5	Error detection and correction codes - parity check codes and Hamming code-Alphanumeric codes:ASCII	3
1.6	Verilog basic language elements: identifiers, data objects, scalar data types, operators	2
2	**Boolean Postulates and Fundamental Gates:**	
2.1	Boolean postulates and laws – Logic Functions and Gates, De-Morgan's Theorems, Principle of Duality	2
2.2	Minimization of Boolean expressions, Sum of Products (SOP), Product of Sums (POS)	2
2.3	Canonical forms, Karnaugh map Minimization	1
2.4	Gate level modelling in Verilog: Basic gates, XOR using NAND and NOR	2
3	**Combinatorial and Arithmetic Circuits**	
3.1	Combinatorial Logic Systems - Comparators, Multiplexers, Demultiplexers	2
3.2	Encoder, Decoder, Half and Full Adders, Subtractors, Serial and Parallel Adders, BCD Adder	3

NEHRU COLLEGE OF ENGINEERING & RESEARCH CENTRE THIRUVILWAMALA THRISSUR
PRINCIPAL
Nehru College of Engineering and Research Centre
Pampady, Thiruvilwamala, Thrissur Dt
Pin 680 597 Kerala

Download Syllabus and Study Materials from WWW.KTUSTUDENTS.IN

KTU Students

3.3	Gate level modelling combinational logic circuits in Verilog: half adder, full adder, mux, demux, decoder, encoder	3
4	**Sequential Logic Circuits:**	
4.1	Building blocks like S-R, JK and Master-Slave JK FF, Edge triggered FF	2
4.2	Conversion of Flipflops, Excitation table and characteristic equation.	1
4.3	Ripple and Synchronous counters, Shift registers-SIPO.SISO,PISO,PIPO	2
4.4	Ring counter and Johnsons counter, Asynchronous and Synchronous counter design	3
4.5	Mod N counter, Random Sequence generator	1
4.6	Modelling sequential logic circuits in Verilog: flipflops, counters	2
5	**Logic families and its characteristics:**	
5.1	TTL,ECL,CMOS- Electrical characteristics of logic gates – logic levels and noise margins, fan-out, propagation delay, transition time, power consumption and power-delay product.	3
5.2	TTL inverter - circuit description and operation	1
5.3	CMOS inverter - circuit description and operation	1
5.4	Structure and operations of TTL and CMOS gates; NAND in TTL, NAND and NOR in CMOS.	2

NEHRU COLLEGE OF ENGINEERING & RESEARCH CENTRE
THIRUVILWAMALA, THRISSUR DT.

PRINCIPAL
Nehru College of
Engineering and Research Centre
Pampady, Thiruvilwamala, Thrissur Dt
Pin 680 597 Kerala

Download Syllabus and Study Materials from WWW.KTUSTUDENTS.IN

NEHRU COLLEGE OF ENGINEERING AND RESEARCH CENTRE
(NAAC Accredited)
(Approved by AICTE, Affiliated to APJ Abdul Kalam Technological University, Kerala)

KTU Students

ELECTRONICS AND COMMUNICATION ENGINEERING

Simulation Assignments (ECT203)

The following simulations can be done in QUCS, KiCad or PSPICE.

BCD Adder

- Realize a one bit paraller adder. simulate and test it.
- Cascade four such adders to form a four bit parallel adder
- Simulate it and make it into a subcircuit.
- Develop a one digit BCD adder, based on the subcircuit, simulate and test it

BCD Subtractor

- Use the above 4 -bit adder subcircuit, implement and simulate a one digit BCD subtractor.
- Test it with two BCD inputs

Logic Implementation with Multiplexer

- Develop an 8 : 1 multiplexer using gates, simulate, test and make it into a subcircuit.
- Use this subcircuit to implement the logic function $f(A, B, C) = \sum m(1, 3, 7)$
- Modify the truth table properly and implement the logic function $f(A, B, C, D) = \sum m(1, 4, 12, 14)$ using one 8 : 1 multiplexer.

BCD to Seven Segment Decoder

- Develop a BCD to seven segment decoder using gates and make it into a subcircuit.
- simulate this and test it

Ripple Counters

- Understand the internal circuit of 7490 IC and develop it in the simulator.
- Make it into a subcircuit and simulate it. Observe the truth table and timing diagrams for mod-5, mod-2 and mod-10 operation.
- Develop a mod-40 (mod-8 and mod-5) counter by cascading two such subcircuits.
- Simulate and observe the timing diagram and truth table.

NEHRU COLLEGE OF ENGINEERING & RESEARCH CENTRE THIRUVILWAMALA THRISSUR-680 597

PRINCIPAL
Nehru College of
Engineering and Research Centre
Pampady, Thiruvilwamala Thrissur Dt
Pin 680 597 Kerala

Download Syllabus and Study Materials from WWW.KTUSTUDENTS.IN

KTU Students

Synchronous Counters

- Design and develop a 4-bit synchronous counter using J-K flip-flops.
- Perform digital simulation and observe the timing diagram and truth table.

Sequence Generator

- Connect D flip-flops to realize and 8-bit shift register and make it into a subcircuit.
- sequence generator that relies on the polynomial $P(D) = D_7 + D_3 + 1$, with each D represent delay of one clock cycle
- Simulate and observe this maximal length pseudo random sequence.

Transfer Characteristics of TTL and CMOS Inverters

- Develop a standard TTL circuit and perform sweep simulation and observe the transfer characteristics. Compute the threshold voltage and noise margns.
- Develop and simulate standard CMOS inverter circuit and perform sweep simulation and observe the transfer characteristics. Compute the threshold voltage and noise margins.

APJ ABDUL KALAM TECHNOLOGICAL UNIVERSITY
KTU
Estd. 2014

NEHRU COLLEGE OF ENGINEERING & RESEARCH CENTRE
THIRUVILWAMALA, THRISSUR-DT

PRINCIPAL
Nehru College of
Engineering and Research Centre
Pampady, Thiruvilwamala, Thrissur Dt
Pin 680 597 Kerala

Download Syllabus and Study Materials from WWW.KTUSTUDENTS.IN

KTU Students

ELECTRONICS AND COMMUNICATION ENGINEERING

Model Question Paper

A P J Abdul Kalam Technological University

Third Semester B Tech Degree Examination

Branch: Electronics and Communication

Course: ECT 203 Logic Circuit Design

Time: 3 Hrs **Max. Marks: 100**

PART A

Answer All Questions

1	Convert 203.52_{10} to binary and hexadecimal.	(3)	K_1
2	Compare bitwise and logical verilog operators	(3)	K_1
3	Prove that NAND and NOR are not associative.	(3)	K_2
4	Convert the expression ABCD+ABC+ACD to minterms.	(3)	K_2
5	Define expressions in Verilog with example.	(3)	K_2
6	Explain the working of a decoder.	(3)	K_1
7	What is race around condition?	(3)	K_1
8	Convert a T flip-flop to D flip-flop.	(3)	K_2
9	Define fan-in and fan-out of logic circuits.	(3)	K_2
10	Define noise margin and how can you calculate it?	(3)	K_2

PART B

Answer one question from each module. Each question carries 14 mark.

Module I

11(A)	Subtract 46_{10} from 100_{10} using 2's complement arithmetic.	(8)	K_2
11(B)	Give a brief description on keywords and identifiers in Verilog with example.	(6)	K_2

OR

NEHRU COLLEGE OF ENGINEERING RESEARCH CENTRE THIRUVILWAMALA THRISSUR-DT

PRINCIPAL
Nehru College of
Engineering and Research Centre
Pampady, Thiruvilwamala, Thrissur Dt
Pin 680 597 Kerala

Download Syllabus and Study Materials from WWW.KTUSTUDENTS.IN

KTU Students

12(A)	Explain the floating and fixed point representation of numbers	(8)	K_2
12(A)	Explain the differences between programming lanuguages and HDLs	(6)	K_2

Module II

13(A)	Simplify using K-map $f(A, B, C, D) = \sum m(4, 5, 7, 8, 9, 11, 12, 13, 15)$ using K-maps	(7)	K_3
13(B)	Write a Verilog code for implementing above function	(7)	K_3

OR

14(A)	Write a Verilog code to implement the basic gates.	(7)	K_3
14(B)	Reduce the following Boolean function using K-Map and implement the simplified function using the logic gates $f(A, B, C, D) = \sum (0, 1, 4, 5, 6, 8, 9, 10, 12, 13, 14)$	(7)	K_3

Module III

15(A)	Design a 3-bit magnitude comparator circuit.	(8)	K_3
15(B)	Write a Verilog description for a one bit full adder circuit.	(6)	K_3

OR

16(A)	Write a verilog code to implement 4:1 multiplexer	(6)	K_3
16(B)	Implement the logic function $f(A, B, C) = \sum m(0, 1, 4, 7)$ using 8 : 1 and 4 : 1 multiplexers.	(8)	K_3

NEHRU COLLEGE OF ENGINEERING & RESEARCH CENTRE
THIRUVILWAMALA, THRISSUR DT.

PRINCIPAL
Nehru College of
Engineering and Research Centre
Pampady Thiruvilwamala Thrissur Dt
Pin 680 597 Kerala

Download Syllabus and Study Materials from WWW.KTUSTUDENTS.IN

KTU Students

Module IV

17	Design MOD 12 asynchronous counter using T flip-flop.	(14)	K_3

OR

18(A)	Explain the operation of Master Slave JK flipflop.	(7)	K_3
18(B)	Derive the ouput Q_{n+1} in Terms of J_n, K_n and Q_n	(7)	K_3

Module V

19(A)	Explain in detail about TTL with open collector output configuration.	(8)	K_2
19(B)	Draw an ECL basic gate and explain.	(6)	K_2

OR

20(A)	Demonstrate the CMOS logic circuit configuration and characteristics in detail.	(8)	K_2
20(B)	Compare the characteristics features of TTL and ECL digital logic families	(6)	K_2

APJ ABDUL KALAM TECHNOLOGICAL UNIVERSITY
KTU
Estd. 2014

NEHRU COLLEGE OF ENGINEERING & RESEARCH CENTRE
THRISSUR-DT

PRINCIPAL
Nehru College of
Engineering and Research Centre
Pampady Thiruvilwamala, Thrissur Dt
Pin 680 597 Kerala

Download Syllabus and Study Materials from WWW.KTUSTUDENTS.IN

KTU Students

COURSE CODE	COURSE NAME	L-T-P-C	YEAR OF INTRODUCTION
EC302	Digital Communication	4-0-0-4	2016

Prerequisite: EC204 Signals and Systems, EC208 Analog Communication

Course Objectives:

- To understand the concept of Digital representation of analog source
- To understand the Performance comparison various pulse modulation schemes
- To discuss Inter Symbol Interference (ISI) problem in digital communication and to derive the Nyquist Criteria for zero ISI in data Transmission
- To analyse the need for introducing ISI in controlled manner
- To understand signal space representation of signal using Gram Schmidt orthonormalisation procedure
- To analyse the error probability for different modulation schemes like BPSK, BFSK, QPSK etc.
- To understand the principle of spread spectrum communication and to illustrate the concept of FHSS and DSSS
- To understand various Multiple Access Techniques

Syllabus: Overview of Random variables and Random process, Overall picture and relevance of digital communication, Digital Pulse modulation, Signal space concepts, Matched filter receiver, Review of Gaussian random process, Digital band pass modulation schemes, Detection of signals in Gaussian noise, Pseudo–noise sequences, Importance of synchronization, Spread spectrum communication, Diversity techniques, Multiple Access Techniques.

Expected Outcome

The students will be able to

i. Illustrate the Digital representation of analog source
ii. Compare the performance of various Digital Pulse Modulation Schemes
iii. Apply the knowledge of ISI problems in Digital communication to derive Nyquist criteria for zero ISI
iv. Analyse the need for introducing ISI in Digital Communication in a controlled manner
v. Construct signal space representation of signal using Gram Schmidt orthonormalisation procedure
vi. Compare the error probability for different digital modulation schemes like BPSK, BFSK, QPSK etc.
vii. Describe the principle of spread spectrum communication and to illustrate the concept of FHSS and DSSS
viii. Understand various Diversity Techniques

Text Books:

1. John G. Proakis, Masoud Salehi, Digital Communication, McGraw Hill Education Edition, 2014
2. Nishanth N, Digital Communication, Cengage Learning India , 2017
3. Ramakrishna Rao, Digital communication, Tata McGraw Hill Education Pvt. Limited.
4. Simon Haykin, Communication Systems, 4/e Wiley India, 2012.

NEHRU COLLEGE OF ENGINEERING AND RESEARCH CENTRE THIRUVILWAMALA THRISSUR

For more study materials>www.ktustudents.in

PRINCIPAL
Nehru College of
Engineering and Research Centre
Thiruvilwamala

References:
1. Couch: Analog and Digital Communication. 8e, Pearson Education India, 2013.
2. H.Taub and Schilling Principles of Communication Systems, , TMH, 2007
3. K.Sam Shanmugham, Digital and Analog Communication Systems, John Wiley & Sons
4. Pierre Lafrance ,Fundamental Concepts in Communication, Prentice Hall India.
5. Sheldon.M.Ross, "Introduction to Probability Models", Academic Press, 7th edition.
6. Sklar: Digital Communication, 2E, Pearson Education.
7. T L Singal, Digital Communication, McGraw Hill Education (India) Pvt Ltd, 2015

Course Plan

Module	Course content	Hours	End Sem. Exam Marks
I	**Overview of Random variables and Random process:** Random variables–continuous and Discrete, random process-Stationarity, Autocorrelation and power spectral density, Transmission of Random Process through LTI systems, PSD, AWGN	3	15
	Pulse Code Modulation (PCM): Pulse Modulation, Sampling process, Performance comparison of various sampling techniques Aliasing, Reconstruction, PAM, Quantization, Noise in PCM system	3	
	Modifications of PCM: Delta modulation, DPCM, ADPCM, ADM, Performance comparison of various pulse modulation schemes, Line codes, PSD of various Line codes	4	
II	**Transmission over baseband channel:** Matched filter, Inter Symbol Interference (ISI), Nyquist Criteria for zero ISI, Ideal solution, Raised cosine spectrum, Eye Pattern	4	15
	Correlative Level Coding - Duobinary coding, precoding, Modified duobinary coding, Generalized Partial response signalling.	3	
	FIRST INTERNAL EXAM		
III	**Signal Space Analysis:** Geometric representation of signals, Gram Schmidt orthogonization procedure.	3	15
	Transmission Over AWGN Channel: Conversion of the continuous AWGN channel into a vector channel, Likelihood function, Maximum Likelihood Decoding, Correlation Receiver	4	
IV	**Digital Modulation Schemes:** Pass band transmission model, Coherent Modulation Schemes- BPSK, QPSK, BFSK. Non-Coherent orthogonal modulation schemes, Differential Phase Shift Keying (DPSK)	4	15
	Detection of Binary modulation schemes in the presence of noise, BER for BPSK, QPSK, BFSK	5	
	SECOND INTERNAL EXAM		
V	**Pseudo–noise sequences**: Properties of PN sequences. Generation of PN Sequences, generator polynomials, Maximal length codes and Gold Codes.	3	20

PRINCIPAL
Nehru College of Engineering and Research Centre
Thiruvilwamala, Thrissur
Pin 680 597, Kerala

For more study materials>www.ktustudents.in

	Importance of synchronization: Carrier, frame and symbol/chip synchronization techniques.	2	
	Spread spectrum communication: Direct sequence spread spectrum with coherent binary phase shift keying, Processing gain, Probability of error, Anti-jam Characteristics, Frequency Hop spread spectrum with MFSK, Slow and Fast frequency hopping.	4	
VI	**Multipath channels:** classification, Coherence time, Coherence bandwidth, Statistical characterization of multi path channels, Binary signalling over a Rayleigh fading channel.	3	20
	Diversity techniques: Diversity in time, frequency and space.	2	
	Multiple Access Techniques: TDMA, FDMA, CDMA and SDMA – RAKE receiver, Introduction to Multicarrier communication- OFDM	5	

END SEMESTER EXAM

Question Paper Pattern (End Semester Exam)

Maximum Marks : 100 **Time : 3 hours**

The question paper shall consist of three parts. Part A covers modules I and II, Part B covers modules III and IV, and Part C covers modules V and VI. Each part has three questions uniformly covering the two modules and each question can have maximum four subdivisions. In each part, any two questions are to be answered. Mark patterns are as per the syllabus with 30% for theory and 70% for logical/numerical problems, derivation and proof.

NEHRU COLLEGE OF ENGINEERING & RESEARCH CENTRE

PRINCIPAL
Nehru College of
Engineering and Research Centre
Thirumalayampath, Thiruvilwamala, Thrissur
Pin 680 587 Kerala

For more study materials>www.ktustudents.in

KTU Students

COURSE CODE	COURSE NAME	L-T-P-C	YEAR OF INTRODUCTION
EC304	VLSI	3-0-0-3	2016

Prerequisite: EC203 Solid State Devices, EC204 Analog Integrated Circuit.

Course objectives:

- To give the knowledge about IC Fabrication Techniques
- To impart the skill of analysis and design of MOSFET and CMOS logic circuits.

Syllabus:

IC Fabrication Technology, CMOS IC Fabrication Sequence, CMOS inverters, Design rules, Static CMOS Design, Dynamic CMOS circuits, Pass transistor, Read Only Memory, Random Access Memory, Sense amplifiers, Adders, multipliers, Testing of VLSI circuits.

Expected outcome:

The students will be able to design and analyse various MOSFET and CMOS logic circuits.

Text Books:

1. John P Uyemura, Introduction to VLSI Circuits and Systems, Wiley India, 2006
2. S.M. SZE, VLSI Technology, 2/e, Indian Edition, McGraw-Hill,2003

References:

1. Jan M.Rabaey, Digital Integrated Circuits- A Design Perspective, Prentice Hall, Second Edition, 2005.
2. Neil H.E. Weste, Kamran Eshraghian, Principles of CMOS VLSI Design- A Systems Perspective, Second Edition. Pearson Publication, 2005
3. Razavi - Design of Analog CMOS Integrated Circuits,1e, McGraw Hill Education India Education, New Delhi, 2003.
4. Sung –Mo Kang & Yusuf Leblebici, CMOS Digital Integrated Circuits- Analysis & Design, McGraw-Hill, Third Ed., 2003.
5. Yuan Taur & Ning, Fundamentals of Modern VLSI Devices, Cambridge University Press, 2008

Course Plan

Module	Course content	Hours	End Sem. Exam Marks
I	**Material Preparation**- Purification, Crystal growth (CZ and FZ process), wafer preparation **Thermal Oxidation-** Growth mechanisms, Dry and Wet oxidation, Deal Grove model.	4	15
	Diffusion- Fick's Laws, Diffusion with constant surface concentration and from a constant source, diffusion techniques. **Ion implantation**-Technique, Range Theory, annealing.	3	
II	**Epitaxy :** Vapour phase epitaxy and molecular beam epitaxy **Lithography-** Photo lithographic sequence, Electron Beam Lithography, Etching and metal deposition	4	15
	Methods of isolation Circuit component fabrication: transistor, diodes, resistors, capacitors, N-well CMOS IC Fabrication Sequence	3	
	FIRST INTERNAL EXAM		

NEHRU COLLEGE OF ENGINEERING & RESEARCH CENTRE
PRINCIPAL
Nehru College of Engineering and Research Centre
Pambady, Thiruvilwamala, Thrissur Dt.
Pin 680 587, Kerala

For more study materials>www.ktustudents.in

III	**CMOS inverters**- DC characteristics, switching characteristics, power dissipation	4	**15**

NEHRU COLLEGE OF ENGINEERING & RESEARCH CENTRE
THIRUVILWAMALA, THRISSUR DT.

PRINCIPAL
Nehru College of
Engineering and Research Centre
Pamboady, Thiruvilwamala, Thrissur Dt
Pin 680 597, Kerala

For more study materials>www.ktustudents.in

	Layout Design rules, Stick Diagram and layout of CMOS Inverter, two input NAND and NOR gates	4	
IV	**MOSFET Logic Design** -Pass transistor logic, Complementary pass transistor logic and transmission gate logic , realization of functions	6	15
	SECOND INTERNAL EXAM		
V	**Read Only Memory**-4x4 MOS ROM Cell Arrays(OR,NOR,NAND) **Random Access Memory** –SRAM-Six transistor CMOS SRAM cell, DRAM –Three transistor and One transistor Dynamic Memory Cell	4	20
	Sense amplifiers –Differential Voltage Sensing Amplifiers Introduction to PLDs and FPGAs, Design of PLAs.	3	
VI	**Adders**- Static adder, Carry-By pass adder, Linear Carry-Select adder, Square- root carry- select adder **Multipliers**-Array multiplier	4	20
	END SEMESTER EXAM		

Question Paper Pattern (End Semester Exam)

Maximum Marks : 100 **Time : 3 hours**

The question paper shall consist of three parts. Part A covers modules I and II, Part B covers modules III and IV, and Part C covers modules V and VI. Each part has three questions uniformly covering the two modules and each question can have maximum four subdivisions. In each part, any two questions are to be answered. Mark patterns are as per the syllabus with 70% for theory and 30% for logical/numerical problems, derivation and proof.

NEHRU COLLEGE OF ENGINEERING & RESEARCH CENTRE THIRUVILWAMALA THRISSUR DIST

Estd. 2014

PRINCIPAL
Nehru College of
Engineering and Research Centre
Pambady, Thiruvilwamala, Thrissur Dt

For more study materials>www.ktustudents.in

KTU Students

COURSE CODE	COURSE NAME	L-T-P-C	YEAR OF INTRODUCTION
EC306	Antenna & Wave Propagation	3-0-0-3	2016

Prerequisite: EC303 Applied Electromagnetic Theory

Course objectives:

- To learn the basic working of antennas.
- To study various antennas, arrays and radiation patterns of antennas.
- To understand various techniques involved in various antenna parameter measurements.
- To understand the propagation of radio waves in the atmosphere.

Syllabus:

Antenna and antenna parameters, Duality of antennas, Derivation of electromagnetic fields and directivity of short dipole and half wave dipole, Measurement of antenna parameters. Antenna arrays and design of Endfire, broadside, binomial and Dolphchebyshev arrays, Principles of practical antennas. Traveling wave antennas, principle and applications of V and rhombic antennas Principles of Horn, Parabolic dish antenna and Cassegrain antenna, Log periodic antenna array and Helical antenna. Design of rectangular Patch antennas. Principle of smart antenna, Radio wave propagation, Different modes, effect of earth's magnetic field. Fading and diversity techniques.

Expected outcome:

The student will be able to know:

i. The basic working of antennas.
ii. Various antennas, arrays and radiation patterns of antennas
iii. Various techniques involved in various antenna parameter measurements.
iv. The propagation of radio waves in the atmosphere.

Text Books:

1. Balanis, Antenna Theory and Design, 3/e, Wiley Publications.
2. John D. Krauss, Antennas for all Applications, 3/e, TMH.

References:

1. Collin R.E, Antennas & Radio Wave Propagation, McGraw Hill. 1985.
2. Jordan E.C. & K. G. Balmain, Electromagnetic Waves & Radiating Systems, 2/e, PHI.
3. Raju G.S.N., Antenna and Wave Propagation, Pearson, 2013.
4. Sisir K.Das & Annapurna Das, Antenna and Wave Propagation, McGraw Hill,2012
5. Terman, Electronics & Radio Engineering, 4/e, McGraw Hill.
6. Thomas A. Milligan, Modern Antenna Design, IEEE PRESS, 2/e, Wiley Inter science.

NEHRU COLLEGE OF ENGINEERING & RESEARCH CENTRE
THIRUVILWAMALA, THRISSUR DT

PRINCIPAL
Nehru College of
Engineering and Research Centre
Pambady, Thiruvilwamala, Thrissur Dt
Pin 680 597 Kerala

For more study materials>www.ktustudents.in

Course Plan			
Module	**Course content**	**Hours**	**End Sem. Exam Marks**
I	Basic antenna parameters - gain, directivity, beam solid angle, beam width and effective aperture calculations. Effective height - wave polarization - antenna temperature - radiation resistance - radiation efficiency - antenna field zones - principles of reciprocity. Duality of antennas.	7	15
II	Concept of retarded potential. Field, directivity and radiation resistance of a short dipole and half wave dipole. Measurement of radiation pattern, gain, directivity and impedance of antenna	7	15
FIRST INTERNAL EXAM			
III	Arrays of point sources - field of two isotropic point sources - principle of pattern multiplication - linear arrays of 'n' isotropic point sources. Grating lobes.	4	15
	Design of Broadside, Endfire & Binomial arrays. Design of DolphChebyshev arrays.	4	
IV	Basic principle of beam steering. Travelling wave antennas. Principle and applications of V and rhombic antennas. Principles of Horn, Parabolic dish antenna, Cassegrain antenna (expression for E, H andGain without derivation).	6	15
SECOND INTERNAL EXAM			
V	Principle of Log periodic antenna array and Helical antenna. Antennas for mobile base station and handsets.	3	20
	Design of rectangular Patch antennas. Principle of smart antenna.	3	
VI	Radio wave propagation , Modes , structure of atmosphere, sky wave propagation , effect of earth's magnetic field, Ionospheric abnormalities and absorption, space wave propagation, LOS distance	4	20
	Field strength of space wave, duct propagation, VHF and UHF Mobile radio propagation, tropospheric scatter propagation, fading and diversity techniques.	4	
END SEMESTER EXAM			

Question Paper Pattern (End semester exam)

Max. Marks : 100 **Time : 3 hours**

The question paper shall consist of three parts. Part A covers modules I and II, Part B covers modules III and IV, and Part C covers modules V and VI. Each part has three questions uniformly covering the two modules and each question can have maximum four subdivisions. In each part, any two questions are to be answered. Mark patterns are as per the syllabus with 50% for theory and 50% for logical/numerical problems, derivation and proof.

PRINCIPAL
Nehru College of
Engineering and Research Centre
Pampady, Thiruvilwamala, Thrissur
Pin - 680 597, Kerala

For more study materials>www.ktustudents.in

Course Plan			
Module	**Course content**	**Hours**	**End Sem. Exam Marks**
I	Introduction to Embedded Systems– Components of embedded system hardware–Software embedded into the system – Embedded Processors - CPU architecture of ARM processor (ARM9) – CPU Bus Organization and Protocol.	4	15
	Design and Development life cycle model - Embedded system design process – Challenges in Embedded system design	3	
II	Serial Communication Standards and Devices - UART, HDLC, SCI and SPI.	3	15
	Serial Bus Protocols - I2C Bus, CAN Bus and USB Bus. Parallel communication standards ISA, PCI and PCI-X Bus.	3	
FIRST INTERNAL EXAM			
III	Memory devices and systems - memory map – DMA - I/O Devices – Interrupts - ISR – Device drivers for handling ISR – Memory Device Drivers – Device Drivers for on-board bus.	6	15
IV	Programming concepts of Embedded programming – Features of Embedded C++ and Embedded Java (basics only). Software Implementation, Testing, Validation and debugging, system-on-chip.	6	15
	Design Examples: Mobile phones, ATM machine, Set top box	1	0
SECOND INTERNAL EXAM			
V	Inter Process Communication and Synchronization -Process, tasks and threads –Shared data– Inter process communication - Signals – Semaphore – Message Queues – Mailboxes – Pipes – Sockets – Remote Procedure Calls (RPCs).	8	20
VI	Real time operating systems - Services- Goals – Structures - Kernel - Process Management – Memory Management – Device Management – File System Organization. Micro C/OS-II RTOS - System Level Functions – Task Service Functions – Memory Allocation Related Functions – Semaphore Related Functions. Study of other popular Real Time Operating Systems.	8	20
END SEMESTER EXAM			

NEHRU COLLEGE OF ENGINEERING & RESEARCH CENTRE
THIRUVILWAMALA
THRISSUR

PRINCIPAL
Nehru College of
Engineering and Research Centre
Pambady, Thiruvilwamala, Thrissur Dt
Pin 680 597 Kerala

For more study materials>www.ktustudents.in

Question Paper Pattern (End semester exam)

Maximum Marks : 100 **Time : 3 hours**

The question paper shall consist of three parts. Part A covers modules I and II, Part B covers modules III and IV, and Part C covers modules V and VI. Each part has three questions uniformly covering the two modules and each question can have maximum four subdivisions. In each part, any two questions are to be answered. Mark patterns are as per the syllabus with 100 % for theory.

APJ ABDUL KALAM TECHNOLOGICAL UNIVERSITY
KTU
Estd. 2014

NEHRU COLLEGE OF ENGINEERING & RESEARCH CENTRE
THIRUVILWAMALA, THRISSUR-DT

PRINCIPAL
Nehru College of
Engineering and Research Centre
Pampady, Thiruvilwamala, Thrissur Dt
Pin - 680 597, Kerala

For more study materials>www.ktustudents.in

KTU Students

COURSE CODE	COURSE NAME	L-T-P-C	YEAR OF INTRODUCTION
EC366	Real Time Operating Systems	3-0-0-3	2016

Prerequisite: EC206 Computer Organization

Course objectives:

- To understand the basics of operating systems tasks and basic OS architectures and develop these to RTOS
- To understand concepts of task scheduling
- To understand problems and issues related with multitasking
- To learn strategies to interface memory and I/O with RTOS kernels
- To impart skills necessary to develop software for embedded computer systems using a real-time operating system.

Syllabus:
Introduction to OS and RTOS, Process management of OS/RTOS, Process Synchronization, Memory and I/O management, Applications of RTOS

Expected outcome:
At the end of the course the students will be familiar with operating systems. They will have an in depth knowledge about the real time operating systems and its applications.

Text Books:

1. C.M. Krishna and G.Shin, Real Time Systems, McGraw-Hill International Edition, 1997.
2. Jean J Labrosse, Embedded Systems Building Blocks Complete and Ready-to-use Modules in C, CMP books, 2/e, 1999.

References:

1. Jean J Labrosse , Micro C/OS-II, The Real Time Kernel, CMP Books, 2011
2. Sam Siewert, V, Real-Time Embedded Components and Systems: With Linux and RTOS (Engineering), 2015
3. Tanenbaum, Modern Operating Systems, 3/e, Pearson Edition, 2007.
4. VxWorks: Programmer's Guide 5.4, Windriver, 1999
5. Wayne Wolf, Computers as Components: Principles of Embedded Computing System Design, 2/e, Kindle Publishers, 2005.

Course Plan

Module	Course content	Hours	End Sem. Exam Marks
	Operating system objectives and functions, Virtual Computers, Interaction of O. S. & hardware architecture, Evolution of operating systems	2	15
	Architecture of OS (Monolithic, Microkernel, Layered, Exo-kernel and Hybrid kernel structures)	3	
	Batch, Multi programming, Multitasking, Multiuser, parallel, distributed & real –time O.S.	3	
II	Uniprocessor Scheduling: Types of scheduling	2	15
	Scheduling algorithms: FCFS, SJF, Priority, Round Robin	3	
	UNIX Multi-level feedback queue scheduling, Thread Scheduling, Multiprocessor Scheduling concept	3	

NEHRU COLLEGE OF ENGINEERING & RESEARCH CENTRE
PRINCIPAL
Nehru College of Engineering and Research Centre

For more study materials>www.ktustudents.in

NEHRU COLLEGE OF ENGINEERING AND RESEARCH CENTRE
(NAAC Accredited)
(Approved by AICTE, Affiliated to APJ Abdul Kalam Technological University, Kerala)

Since 1968

FIRST INTERNAL EXAM

PRINCIPAL
Nehru College of
Engineering and Research Centre
Pambady, Thiruvilwamala, Thrissur Dt
Pin - 680 597 Kerala

NEHRU COLLEGE OF ENGINEERING & RESEARCH CENTRE
PAMBADY
THIRUVILWAMALA
THRISSUR DT

For more study materials>www.ktustudents.in

III	Concurrency: Principles of Concurrency, Mutual Exclusion H/W Support, software approaches, Semaphores and Mutex, Message Passing techniques	2	15
	Classical Problems of Synchronization: Readers-Writers Problem, Producer Consumer Problem, Dining Philosopher problem.	3	
	Deadlock: Principles of deadlock, Deadlock Prevention, Deadlock Avoidance, Deadlock Detection, An Integrated Deadlock Strategies.	3	
IV	Memory Management requirements, Memory partitioning: Fixed, dynamic, partitioning	3	15
	Memory allocation Strategies (First Fit, Best Fit, Worst Fit, Next Fit), Fragmentation, Swapping, Segmentation, Paging, Virtual Memory, Demand paging	2	
	Page Replacement Policies (FIFO, LRU, Optimal, clock), Thrashing, Working Set Model	3	
SECOND INTERNAL EXAM			
V	I/O Management and Disk Scheduling: I/O Devices, Organization of I/O functions	2	20
	Operating System Design issues, I/O Buffering, Disk Scheduling (FCFS, SCAN, C-SCAN, SSTF), Disk Caches	3	
VI	Comparison and study of RTOS: Vxworks and µCOS	3	20
	Case studies: RTOS for Control Systems.	3	
END SEMESTER EXAM			

Question Paper Pattern (End semester exam)

Maximum marks: 100 **Time: 3 hours**

The question paper shall consist of three parts. Part A covers modules I and II, Part B covers modules III and IV, and Part C covers modules V and VI. Each part has three questions uniformly covering the two modules and each question can have maximum four subdivisions. In each part, any two questions are to be answered. Mark patterns are as per the syllabus with 50 % for theory and 50% for logical/numerical problems, derivation and proof.

NEHRU COLLEGE OF ENGINEERING & RESEARCH CENTRE THRISSUR

PRINCIPAL
Nehru College of
Engineering and Research Centre
Pampady, Thiruvilwamala, Thrissur Dt
Pin 680 597 Kerala

For more study materials>www.ktustudents.in

EC14 303 NETWORK ANALYSIS & SYNTHESIS

Teaching scheme: **Credits 4**
3 Hours lecture and 1 hour tutorial per week

Objectives

- *To expose the students to the basic concepts of electric circuits and their analysis in time and frequency domain*
- *To introduce the concept of filter circuits and design of passive filters*
- *To introduce the techniques of network synthesis*

Module I (15 hours)
Basic Circuit elements: R, L, C and mutually coupled circuits-voltage current relationship- Independent and dependent Sources. **Analysis of electrical networks**: Loop and Nodal analysis. **Network theorems**: Thevenin, Norton, Superposition, Source transformations, Maximum Power Transfer theorems. Time domain analysis of R-L and R-C circuits- initial conditions. **S-Domain analysis of circuits**: Review of Laplace transform- Transforms of basic signals- transformation of a circuit into S-domain, Analysis of the transformed circuit- mutually coupled circuits, transient analysis of RC, RL and LC networks with Impulse, step, pulse, ramp and exponential inputs- step response of RLC network

Module II (13 hours)
Network functions: The concept of complex frequency- driving point and transfer functions-Impulse response-Poles and Zeros of network functions-their locations and effects on the time and frequency domain responses-Restriction of poles and zeros in the driving point and transfer function, Time domain behaviour from the pole-zero plot, Bode plot. **Two-port network parameters**: Impedance, admittance, transmission and hybrid-Conversion formulae. Analysis of interconnected two port networks-parallel, series, and cascade connections of two port networks.

Module III (12 hours)
Filters: Brick wall Specifications, Types of filtering, Butterworth Low-Pass Transfer Characteristic, Basic Passive realization of Butterworth filters, Chebyshev Approximation, Characteristics. **Frequency transformations**: Transformation to high pass, band pass and band elimination filters. **Attenuators**: Types of attenuators, T and Bridged T attenuators - compensated attenuators.

Module IV (12 hours)
Elements of realizability Theory: Causality and stability-Hurwitz Polynomials-Positive Real Functions- Elementary Synthesis Procedures. **Synthesis of One-Port Networks**: Properties of L-C Admittance Functions, Synthesis of L-C Driving point Admittances- Properties of R-C Driving point Impedances, Synthesis of R-C Impedances or R-L Admittances-Properties and Synthesis of R-L Impedances and R-C admittances.

NEHRU COLLEGE OF ENGINEERING AND RESEARCH CENTRE
PRINCIPAL
Nehru College of Engineering and Research Centre
Thiruvilwamala, Thrissur Dt
Pin 680 587 Kerala

Text Books

1. Van Valkenberg, *Network Analysis*, Prentice-Hall of India
2. Franklin F. Kuo, *Network Analysis and Synthesis*, Wiley India, Second Edition.
3. Edminister, *Electric Circuits – Schaum's Outline Series*, McGraw-Hill.
4. William H Hayt & Jack E Kemmerly, *Engineering Circuit Analysis*, TMH

Reference Books

1. DeCarlo/Lin, Linear Circuit Analysis, Oxford University Press, Secondedition
2. D. Roy Choudhary, Networks and Systems, New Age International Publishers, Second Edition

Internal Continuous Assessment *(Maximum Marks-50)*

60% - Tests (minimum 2)
30% - Assignments (minimum 2) such as home work, problem solving, group discussions, quiz, literature survey, seminar, term-project, software exercises, etc.
10% - Regularity in the class

University Examination Pattern

PART A: Analytical/problem solving SHORT questions *8x 5 marks=40 marks*

Candidates have to answer EIGHT questions out of TEN. There shall be minimum of TWO and maximum of THREE questions from each module with total TEN questions.

PART B: Analytical/Problem solving DESCRIPTIVE questions 4 x 15 marks=60 marks

Two questions from each module with choice to answer one question.

Maximum Total Marks: 100

NEHRU COLLEGE OF ENGINEERING & RESEARCH CENTRE THIRUVILWAMALA THRISSUR-DT

PRINCIPAL
Nehru College of
Engineering and Research Centre
Pampady, Thiruvilwamala, Thrissur
Pin 68[illegible] 50[illegible] Kerala

EC14 304: SOLID STATE DEVICES

Teaching scheme **Credits: 4**

3 hours lecture and 1 hour tutorial per week

Objectives

- *To impart the basic concepts of semiconductor Physics*
- *To create an insight into the working of different conventional electronic devices*

Module I (12 hours)

Energy bands and charge carriers in semiconductors - direct and indirect band gap semiconductors - concept of effective mass - intrinsic and extrinsic semiconductors - Fermi level - electron and hole concentrations at equilibrium - temperature dependence of carrier concentrations - conductivity and mobility - quasi Fermi level - diffusion and drift of carriers - Einstein relation - continuity equation

Module II (14 hours)

PN junctions - contact potential - space charge at a junction - current flow at a junction - carrier injection - diode equation - minority and majority carrier currents - capacitance of pn junctions - reverse bias breakdown - zener and avalanche breakdown - abrupt and graded junctions – short diodes - Schottky barrier - rectifying and ohmic contacts - tunnel diode - varactor diode - zener diode - GaAs isotope diodes - Metal semiconductor junctions

Module III (13 hours)

Bipolar junction transistors-Minority carrier distribution and terminal currents-the coupled diode model-switching –Drift in the base region-Base narrowing -Avalanche breakdown-Kirk effect-frequency limitations of transistor –capacitance and charging times- Hybrid-pi model

Module IV (13 hours)

Junction FET - pinch off and saturation - gate control - VI characteristics

MOS capacitor - accumulation, depletion and strong inversion - threshold voltage - MOSFET - p channel and n channel MOSFETs - depletion and enhancement mode MOSFETs – small signal model

UJT – operation –VI characteristics

Power Diodes - SCR- Insulated Gate Bipolar Transistor – Power MOSFETs

Text Books

1 Ben G Streetman and Sanjay Banerjee: *Solid State Electronic Devices*, (Fifth Edition) Pearson Education
2 Neamen, *Semiconductor Physics & Devices*, Pearson Education
3 Sze S M, *Physics of Semiconductor Devices*, John Wiley
4 Pierret R F, *Semiconductor Device Fundamentals*, Pearson Education
5 Tyagi M S, *Introduction to Semiconductor Materials & Devices*, John Wiley
6 Sima Dimitrijev, *Physics of Semiconductor Devices,* Oxford University Press

Reference Books

1. Sah C T, *Solid State Electronics*, World Scientific
2. Muller & Camins, *Device Electronics for Integrated Circuits*, John Wiley
3. Dipankar Nagchoudhuri : *Microelectronic Devices*, Pearson Education

NEHRU COLLEGE OF ENGINEERING & RESEARCH CENTRE
PRINCIPAL
Nehru College of
Engineering and Research Centre
Pampady, Thiruvilwamala, Thrissur
Pin - 680 597, Kerala

Internal Continuous Assessment *(Maximum Marks-50)*

60% - Tests (minimum 2)
30% - Assignments (minimum 2) such as home work, problem solving, group discussions, quiz, literature survey, seminar, term-project, software exercises, etc.
10% - Regularity in the class

University Examination Pattern

PART A: Analytical/problem solving and descriptive SHORT questions 8x 5 marks=40 marks

Candidates have to answer EIGHT questions out of TEN. There shall be minimum of TWO and maximum of THREE questions from each module with total TEN questions.

PART B: Analytical/ DESCRIPTIVE questions *4 x 15 marks=60 marks*

Two questions from each module with choice to answer one question.

Maximum Total Marks: 100

NEHRU COLLEGE OF ENGINEERING & RESEARCH CENTRE
THIRUVILWAMALA
THRISSUR DT.

PRINCIPAL
Nehru College of
Engineering and Research Centre
Pampady, Thiruvilwamala, Thrissur Dt.
Pin 680 597, Kerala

EC14 305 ELECTRONIC CIRCUITS I

Teaching scheme **Credits: 4**
3 hours lecture and 1 hour tutorial per week

Objectives

- *To impart the basic idea of constructing passive devices*
- *To develop the skill of analysis and design of various circuits using electronicdevices*

Module I (1 3 H o u r s)
Resistors- Types and tolerances -AF and RF chokes-transformers-Type of capacitors-specification and constructional details - Half wave, full wave and Bridge rectifiers(Analysis and Design)- derivation of rectifier specifications like PIV, DC output voltage, ripple factor, efficiency, transformer utilization factor - analysis and design of filters with rectifiers - L, C, LC and pi filters

Module II (1 3 H o u r s)
Diode circuit models-DC-low frequency and high frequency small signal models-applications- diode clipping and clamping circuits, voltage multiplier circuits - Regulators - zener diode regulator- emitter follower output regulator - series pass transistor feedback voltage regulator- short circuit protection and fold back limiting - load and line regulation curves

Module III (1 3 H o u r s)
BJT circuit models - small signal equivalent models-the hybrid and T model of transistor-BJT amplifiers- biasing - load line - bias stabilization - stability factor - bias compensation - analysis and design of CC, CE and CB configurations - RC coupled multistage amplifiers - high frequency hybrid pi model-the cut off frequencies, unity gain bandwidth

Module IV (1 3 H o u r s)
FET amplifiers: Biasing of JFET and MOSFET - small signal equivalent circuit models-Analysis and design of common source, common drain and common gate amplifier configurations - gain function -Low frequency and high frequency responses- Use of open circuit and short circuit time constants in finding the cut-off frequencies-Low and high frequency response of common emitter and common source amplifier - Emitter followers and source followers.

NEHRU COLLEGE OF ENGINEERING & RESEARCH CENTRE

PRINCIPAL
Nehru College of
Engineering and Research Centre
Pampady, Thiruvilwamala, Thrissur Dt.
Pin 680 597 Kerala

Text books

1. Sedra A.S & Smith K.C., *Microelectronic Circuits,* Oxford University Press
2. Millman & Halkias : *Integrated Electronics*, MGH. 1996

References

1. Horenstein M.N: *Microelectronic circuits and Devices* PHI
2. Gray & Meyer:*Analysis and Design of Analog Integated Circuits;* John Wiley
3. Schilling D.L. & Belove C.: *Electronic Circuits,* McGraw Hill,
4. Spencer & Ghausi, *Introduction to Electronic Circuit Design*; Pearson Education
5. Thomas L.Floyd and David Buchla: *Fundamentals of Analog Circuits,Pearson*
6. Robert L Boylestad and Louis Nashelsky: *Electronic Devices and Circuit theory*, Pearson

Internal Continuous Assessment *(Maximum Marks-50)*

60% - Tests (minimum 2)
30% - Assignments (minimum 2) such as home work, problem solving, group discussions, quiz, literature survey, seminar, term-project, software exercises, etc.
10% - Regularity in the class

University Examination Pattern

PART A: Analytical/problem solving SHORT questions *8x 5 marks=40 marks*

Candidates have to answer EIGHT questions out of TEN. There shall be minimum of TWO and maximum of THREE questions from each module with total TEN questions.

PART B: Analytical/Problem solving DESCRIPTIVE questions 4 x 15 marks=60 marks

Two questions from each module with choice to answer one question.

Maximum Total Marks: 100

NEHRU COLLEGE OF ENGINEERING & RESEARCH CENTRE THIRUVILWAMALA THRISSUR DT.

PRINCIPAL
Nehru College of
Engineering and Research Centre
Pampady, Thiruvilwamala, Thrissur Dt
Pin 680 597 Kerala

EC14 306 ELECTRICAL ENGINEERING

Teaching scheme **Credits:** 4
3 hours lecture and 1 hour tutorial per week

Objectives

- *To study the operation, performance and characteristics of different types of electrical machines*
- *To familiarise various electrical measuring instruments.*

Module I (12 hours)
Review of transformers – equivalent circuit – phasor diagram – voltage regulation – losses and efficiency – open circuit and short circuit test – Autotransformer – saving of copper – 3 phase transformer - Δ-Δ, Y-Y, Δ - Y, Y - Δ connections – applications. Principle of indicating instruments – moving coil, moving iron and dynamometer type instruments - principle and working of induction type energy meter

Module II (14 hours)
Review of DC generators – DC generator on no load – open circuit characteristics – Armature reaction and commutation (basics only) - load characteristics of shunt, series and compound generators – Review of dc motors – performance characteristics of shunt, series and compound motors – starter – need of starter - 3 point starter –losses in DC machines – power flow diagram – efficiency – speed control – armature voltage control, armature resistance control & field control – applications of dc motor

Module III (12 hours)
Review of alternators – distribution and chording factor – EMF equation – armature reaction – phasor diagram – voltage regulation – predetermination of voltage regulation by EMF method – synchronous motors – rotating magnetic field - principle of operation – starting of synchronous motors – shunting – applications of synchronous motors.

Module IV (14 hours)
Review of 3-phase induction motor – slip – rotor frequency – equivalent circuit – phasor diagram – torque equation – torque-slip characteristics – losses and efficiency – power flow diagram – no-load and blocked rotor tests – starting of 3-phase induction motors – direct-on-line, auto transformer, star-delta and rotor resistance starting – speed control of induction motor – stator voltage control, stator frequency control, rotor resistance control – applications of induction motors

PRINCIPAL
Nehru College of
Engineering and Research Centre
Pampady, Thiruvilwamala, Thrissur Dt
Pin 680 597 Kerala

Text Books

1. P.S. Bimbhra, Electrical Machinery, Khanna Publishers

Reference Books

1. Ashfaq Hussain, *Electrical Machines*, Dhanpat Rai & Co
2. D.P. Kothari & I.J. Nagrath, *Electrical Machines*, Tata McGraw Hill Publishing Company Limited

Internal Continuous Assessment *(Maximum Marks-50)*

60% - Tests (minimum 2)
30% - Assignments (minimum 2) such as home work, problem solving, group discussions, quiz, literature survey, seminar, term-project, software exercises, etc.
10% - Regularity in the class

University Examination Pattern

PART A: Analytical/problem solving SHORT questions *8x 5 marks=40 marks*

Candidates have to answer EIGHT questions out of TEN. There shall be minimum of TWO and maximum of THREE questions from each module with total TEN questions.

PART B: Analytical/Problem solving DESCRIPTIVE questions 4 x 15 marks=60 marks

Two questions from each module with choice to answer one question.

Maximum Total Marks: 100

PRINCIPAL
Nehru College of
Engineering and Research Centre
Pampady, Thiruvilwamala, Thrissur Dt
Pin 680 597, Kerala

NEHRU COLLEGE OF ENGINEERING & RESEARCH CENTRE
THIRUVILWAMALA
THRISSUR DT

PRINCIPAL
Nehru College of
Engineering and Research Centre
Pambady, Thiruvilwamala, Thrissur Dt
Pin 680597, Kerala

EC14 403 SIGNALS AND SYSTEMS

Teaching scheme **Credits:** 4

3 hours lecture and 1 hour tutorial per week

Objectives

- *To introduce the student to the idea of signals, system analysis and its characterization.*
- *To provide a foundation to numerous other courses that deal with signal and systemconcepts directly or indirectly: viz: communication, control, instrumentation etc.*

Module 1 (13 hours)

Introduction to signals and systems- Classification of signals-basic operations on signals- elementary signals- concept of system- properties of systems-stability, invertibility, time invariance, linearity, causality, memory- Time domain representation for Linear Time Invariant Systems -Impulse response representation for LTI systems-Convolution sum, convolution integral and their evaluation - properties of impulse response representation- differential equation and difference equation representation for LTIsystems.

Module II (13 hours)

Fourier representation of continuous time signals- Fourier transform- existence of the Fourier integral- Properties of Fourier representation- energy spectral density and power spectral density- frequency response of LTI systems- correlation theory of deterministic signals- condition for distortionless transmission through an LTI system-transmission of a rectangular pulse through an ideal low pass filter-Hilbert transform-sampling and reconstruction.

Module III (13 hours)

Laplace transform analysis of systems-Unilateral and Bilateral Laplace Transforms, properties-relation between transfer function and differential equation- causality and stability- inverse system- determining the frequency response from poles and zeros.
Fourier representation of discrete time signals- discrete t ime Fourier series and discrete t ime Fourier transform- Properties.

Module IV (13 hours)

Z transform-properties of the region of convergence- properties of the Z- transform-analysis of LTI systems- relating transfer function and difference equation- stability and causality- inverse systems- determining the frequency response from poles and zeros-Unilateral Z-transform- -Solving difference Equations.

Text Books

1. S. Haykin and B. V. Veen, Signals and Systems, John Wiely & Sons, NY
2. A.V Oppenheim, A. S. Wilsky and S. H. Nawab, Signals and Systems, 2nd ed. PHI.
3. A. Anand Kumar, Signals and Systems, 2nd ed. PHI

Reference Books

1 R.E. Zeimer, W.H. Tranter and D. R. Fannin, Signals and Systems: Continuous and Discrete, 4th ed., Pearson Education, Delhi.
2. Charles L. Phillips, John Parr, Eve Riskin, Signal,Systems and Transform, 4th ed. Pearson.
3. J.B. Gurung, Signals and Systems, PHI

NEHRU COLLEGE OF ENGINEERING & RESEARCH CENTRE THIRUVILWAMALA, THRISSUR DT

PRINCIPAL
Nehru College of
Engineering and Research Centre
Pampady, Thiruvilwamala, Thrissur Dt
Pin 680 597 Kerala

Internal Continuous Assessment *(Maximum Marks-50)*

60% - Tests (minimum 2)
30% - Assignments (minimum 2) such as home work, problem solving, group discussions, quiz, literature survey, seminar, term-project, software exercises, etc.
10% - Regularity in the class

University Examination Pattern

PART A: Analytical/problem solving SHORT questions *8x 5 marks=40 marks*

Candidates have to answer EIGHT questions out of TEN. There shall be minimum of TWO and maximum of THREE questions from each module with total TEN questions.

PART B: Analytical/Problem solving DESCRIPTIVE questions *4 x 15 marks=60 marks*

Two questions from each module with choice to answer one question.

Maximum Total Marks: 100

NEHRU COLLEGE OF ENGINEERING & RESEARCH CENTRE
THIRUVILWAMALA
THRISSUR DT

PRINCIPAL
Nehru College of
Engineering and Research Centre
Pampady, Thiruvilwamala, Thrissur Dt
Pin 680 597 Kerala

EC14 404 ELECTRONIC CIRCUITS II

Teaching scheme **Credits:** 4

3 hours lecture and 1 hour tutorial per week

Objective

To develop the skill of analysis and design of various circuits using electronic devices.

Module 1 (13 hours)

Feedback amplifiers-the general feedback structure - effects of negative feedback-Analysis of negative feedback amplifiers -Stability-study of stability using Bode Plots. Positive feedback and oscillators - analysis and design of RC phase shift, Wein bridge, LC and crystal oscillators - stabilization of oscillations-UJT relaxation Oscillators

Module II (14 hours)

Differential Amplifiers -The BJT differential pair- Large and small signal operation-MOS differential amplifier- Large and small signal operation -Nonideal characteristics of the differential amplifier - Differential amplifier with active load- concept of CMRR - methods to improve CMRR - Frequency response analysis.

Module III (13 hours)

Pulse response switching characteristics of a BJT - BJT switches with inductive and capacitive loads - nonsaturating switches - emitter follower with capacitive loading-RC differentiator and integrators Multivibrators - principles & analysis of Astable, monostable and bistable multivibrators-triggering methods-Schmitt trigger analysis of emitter coupled circuit-analysis of sweep circuits-principles of miller and bootstrap circuits.

Module IV (12 hours)

Power amplifier - class A, B, AB, C, D & S power amplifier - harmonic distortion-efficiency -wide band amplifier - broad banding techniques - low frequency and high frequency compensation -cascode amplifier -broad banding using inductive loads - Darlington pairs.

NEHRU COLLEGE OF ENGINEERING RESEARCH CENTRE THIRUVILWAMALA THRISSUR

PRINCIPAL
Nehru College of
Engineering and Research Centre
Pampady, Thiruvilwamala, Thrissur Dt
Pin 680 597 Kerala

Text Books

1. Sedra A.S & Smith K.C., Microelectronic Circuits, Oxford University Press
2. Millman J. & Taub H., Pulse, Digital & Switching Waveforms, Tata McGraw Hill

Reference Books

1. Milman & Halkias, Integrated Electronics, McGraw Hill
2. Gray & Meyer, Analysis and Design of Analog Integated Circuits; John WileySchilling D.L. & Belove C., Electronic Circuits, McGraw Hill
3. Robert L Boylestad and Louis Nashelsky: Electronic Devices and Circuit theory, Pearson
4. Spencer & Ghausi, Introduction to Electronic Circuit Design; Pearson Education
5. Venkata Rao K, Rama Sudha K, Manmadha Rao G., Pulse and Digital Circuits:Pearson Education
6. Electronics for Analog Signal Processing - I, Prof. K. RadhakrishnaRao, IIT Madras (nptel.iitm.ac.in)
7. Electronics for Analog Signal Processing - II, Prof. K. RadhakrishnaRao, IIT Madras (nptel.iitm.ac.in)
8. Analog Circuits, Prof. Shanthi Pavan, IIT Madras (VLSI Group, IIT Madras - Video Lectures)
9. Analog Integrated Circuit Design, Prof. Nagendra Krishnapura, IIT Madras (VLSI Group, IIT Madras - Video Lectures)
10. Analog ICs, Prof. K. RadhakrishnaRao, IIT Madras (nptel.iitm.ac.in)
11. Circuits and Electronics, Prof. Anant Agarwal, MIT(ocw.mit.edu)

Internal Continuous Assessment *(Maximum Marks-50)*

60% - Tests (minimum 2)
30% - Assignments (minimum 2) such as home work, problem solving, group discussions, quiz, literature survey, seminar, term-project, software exercises, etc.
10% - Regularity in the class

University Examination Pattern

PART A: Analytical/problem solving SHORT questions *8x 5 marks=40 marks*

Candidates have to answer EIGHT questions out of TEN. There shall be minimum of TWO and maximum of THREE questions from each module with total TEN questions.

PART B: Analytical/Problem solving DESCRIPTIVE questions 4 x 15 marks=60 marks

Two questions from each module with choice to answer one question.

Maximum Total Marks: 100

NEHRU COLLEGE OF ENGINEERING & RESEARCH CENTRE

PRINCIPAL
Nehru College of
Engineering and Research Centre
Pampady, Thiruvilwamala, Thrissur Dt
Pin 680 597 Kerala

EC14 405 DIGITAL ELECTRONICS

Teaching scheme **Credits:** 4

3 hours lecture and 1 hour tutorial per week

Objectives

This paper exposes the students to digital fundamentals. Through learning this paper students are expected to gain knowledge in designing combinational as well as synchronous sequential circuits

Module I (13 hours)

Boolean algebra: Theorems and operations- Boolean expressions and truth tables-Duality and Inversion- Multiplying out and factoring expressions- Exclusive-OR and equivalence operations- Positive and Negative Logic.

Combinational logic design using truth table- Minterm and Maxterm expansions- Incompletely specified functions.

Minimization Techniques: Algebraic Method, Karnaugh maps (including 5 and 6 variable) – Quine-McCluskey method- Multi-output circuits- Multi-level circuits- Design of circuits with universal gates.

Module II (13 hours)

Number Representation: Fixed point - Floating point - 1's complement - 2's complement. Binary Codes: BCD- Gray code- Excess 3 code- Alpha Numeric codes – Error detecting and correcting codes- properties- Code conversion circuits-Number systems (Binary, Octal and Hexadecimal): conversions and arithmetic operations.

Arithmetic circuits: adders and subtractors- ripple carry adders- carry look ahead adders- adder cum subtractor-BCD Adder and Subtractor.

Combinational logic design using MSI circuits: Multiplexers- Demultiplexers- Decoders- Encoders- ALU- Digital Comparators -Parity Generators.

Introduction to digital logic families: Characteristics- Basic working of a TTL NAND gate ,ECL gate and CMOS logic gate.

Module III (13 hours)

Latches and Flip-Flops: SR latch- SR Flip Flop- JK Flip Flop- D Flip flop - T Flip Flop- Flip Flops with preset and clear inputs- Triggering methods and their circuits -Conversion of one type of flip flop to another – Excitation table – Applications of Flip Flops.

Shift Registers: right shift- left shift- bi directional- SISO- SIPO- PISO- PIPO- universal shift registers. Synchronous counter: Design, Lock out condition.

Asynchronous counter operation- Up counter- Down counter- Up/ down counter-Mod *n* counters. Other types of Counters: Ring counter- Johnson counter- BCD counter.

Module IV (13 hours)

Synchronous sequential circuits: Finite State Machines- Mealy & Moore types- Basic design steps- Design of counters using Sequential Circuit Approach – FSM as an Arbiter circuit– ASM charts.

Asynchronous sequential circuits: Analysis and Synthesis- State Reduction and State Assignment- Hazards.

NEHRU COLLEGE OF ENGINEERING & RESEARCH CENTRE THIRUVILWAMALA THRISSUR DT.

PRINCIPAL
Nehru College of
Engineering and Research Centre
Pampady, Thiruvilwamala, Thrissur Dt
Pin 680 597 Kerala

Text Books

1. Stephen Brown and Zvonko Vranesic, *Fundamentals of Digital Logic with VHDL Design*, TMH
2. Charles H. Roth, Jr. *Fundamentals of Logic Design, 5th edition*, Thomson Books/Cole
3. R P Jain, Modern Digital Electronics, Tata McGraw Hill

Reference

1. John F Wakerly, *Digital Design- Principles and Practices*(Third edition), Pearson
2. Mano M M, *Digital Design,* PHI
3. Thomas L Floyd & R.P Jain, *digital Fundamentals* (Eight edition), Pearson

Internal Continuous Assessment *(Maximum Marks-50)*

60% - Tests (minimum 2)
30% - Assignments (minimum 2) such as home work, problem solving, group discussions, quiz, literature survey, seminar, term-project, software exercises, etc.
10% - Regularity in the class

University Examination Pattern

PART A: Analytical/problem solving SHORT questions *8x 5 marks=40 marks*

Candidates have to answer EIGHT questions out of TEN. There shall be minimum of TWO and maximum of THREE questions from each module with total TEN questions.

PART B: Analytical/Problem solving DESCRIPTIVE questions 4 x 15 marks=60 marks

Two questions from each module with choice to answer one question.

Maximum Total Marks: 100

NEHRU COLLEGE OF ENGINEERING & RESEARCH CENTRE
Thiruvilwamala, Thrissur Dt.

PRINCIPAL
Nehru College of
Engineering and Research Centre
Pambady, Thiruvilwamala, Thrissur Dt
Pin 680 597, Kerala

EC14 406 ANALOG COMMUNICATION

Teaching scheme **Credits:** 4

3 hours lecture and 1 hour tutorial per week

Objectives

- *To impart the basic concepts of analog modulation schemes*
- *To develop understanding about performance of analog communication systems*

Module I (13 hours)

Signals and Spectra - Line Spectra and Fourier Series - Fourier Transforms and Continuous Spectra - Time and Frequency Relations - Signal Distortion in Transmission - Band pass signals and systems - Amplitude modulation -Signals and Spectra of AM, DSB-SC, SSB & VSB- Modulators and transmitters. Exponential continuous wave modulation - Signals and Spectra of FM & PM - Narrow band case, Tone modulation, Transmission bandwidth and Distortion - Generation and Detection of FM and PM - Interference, De-emphasis and Pre-emphasis, Capture effect.

Module II (13 hours)

Receivers for continuous wave modulation - Superheterodyne Receivers, Receiver specifications, Multiplexing systems - Frequency division, Quadrate carrier and Time division Phase locked loop operation, Synchronous detection and Frequency synthesis - FM detection, Analog Pulse Modulation - Signals and Spectra of Pulse Amplitude Modulation (PAM) and Pulse Time Modulation (PWM/PPM).

Module III (13 hours)

Probability and Sample Space - Random Variables and Probability Functions - Statistical Averages - Probability Models - Random Processes - Ensemble Averages and Correlation Functions - Ergodic and Stationary Processes - Gaussian Processes - Random Signals - Power Spectrum - Filtered Random Signals - Noise - Different types - noise equivalent band width - Baseband Signal Transmission With Noise - Baseband Pulse Transmission With Noise.

Module IV (13 hours)

Noise in analog modulation systems - Bandpass noise - System models, Quadrature components, Envelope and Inphase - Linear continuous wave modulation with noise - Synchronous detection - Envelope detection and threshold effect - Exponential continuous wave modulation with noise - Post detection noise - Destination S/N - FM threshold effect - Comparison of continuous wave modulation systems - Analog Pulse Modulation with Noise.

NEHRU COLLEGE OF ENGINEERING & RESEARCH CENTRE
PALAKKAD DIST.

PRINCIPAL
Nehru College of
Engineering and Research Centre
Pampady, Thiruvilwamala, Thrissur-Dt
Pin 680 597 Kerala

Text Books

1. Bruce Carlson., Communication Systems, Tata - McGraw Hill.
2. Lathi B.P., Modern Digital and Analog Communication Systems, Oxford University Press.
3. Ziemer R.E. & Tranter W.H., Principles of Communication, John Wiley.
4. Leon W. Couch, Digital and Analog Communication Systems, Pearson Education.
5. Taub H. & Schilling, Principles of Communication Systems, Tata - McGraw Hill.

Reference Books

1 Simon Haykin, Communication Systems, John Wiley.
2 Dennis Roddy, John Coolen, Electronic Communications, Pearson Education.
3 Sam Shanmugam K., Digital and Analog Communication Systems, John Wiley.
4 Tomasi, Electronic Communications Systems, Pearson Education.
5 Proakis & MasoudSalehi, Fundamentals of Communication systems ,Pearson Education.

Web resources:

1. Principles of Communication, Prof. V. VenkatRao, IIT Madras (nptel.iitm.ac.in)
2. Communication Engineering, Prof. Surendra Prasad, IIT Delhi (nptel.iitm.ac.in).
3. Probabilistic Systems Analysis and Applied Probability, Prof. John Tsitsiklis, MIT(ocw.mit.edu).

Internal Continuous Assessment *(Maximum Marks-50)*

60% - Tests (minimum 2)
30% - Assignments (minimum 2) such as home work, problem solving, group discussions, quiz, literature survey, seminar, term-project, software exercises, etc.
10% - Regularity in the class

University Examination Pattern

PART A: Analytical/problem solving SHORT questions — *8x 5 marks=40 marks*

Candidates have to answer EIGHT questions out of TEN. There shall be minimum of TWO and maximum of THREE questions from each module with total TEN questions.

PART B: Analytical/ DESCRIPTIVE questions — *4 x 15 marks=60 marks*

Two questions from each module with choice to answer one question.

Maximum Total Marks: 100

NEHRU COLLEGE OF ENGINEERING & RESEARCH CENTRE

PRINCIPAL
Nehru College of
Engineering and Research Centre
Thrissur Dt
Pin

EC14 501: COMPUTER ORGANISATION AND ARCHITECTURE

Teaching scheme **Credits:** 4

3 hours lecture and 1 hour tutorial per week

Objectives

- *To impart the basic idea of memory and system organisation and architecture of Computers.*

Module I (13 hours)

Basic structure of computer hardware and software - addressing methods - computer arithmetic - number representations - fast adders - fast multiplication - integer division - floating point numbers and operations.

Module II (13 hours)

The processing unit - instruction execution cycle - sequencing of control signals - hardwired control - microprogrammed control - control signals - micro instructions - microprogram sequencing - branch address modification - prefetching of micro instructions.

Module III (13 hours)

Memory organization - Semiconductor RAM memories - internal organization - Bipolar and MOS devices - Dynamic memories - multiple memory modules and interleaving - cache memories-mapping functions - replacement algorithms - virtual memory - address translation - page tables - memory management units - Secondary memory - disk drives - organization and operations.

Module IV (13 hours)

Input-output organizations-accessing I/O devices-direct memory access (DMA) - interrupts-interrupt handling-handling multiple devices-device identification -vectored interrupts - interrupt nesting - Daisy chaining - I/O interfaces - serial and parallel standards - buses - scheduling- bus arbitration-bus standards. Introduction to parallel organizations - multiple processor organization- symmetric multiprocessors -cache coherence - non uniform memory access - vector computation - introduction to CISC and RISC architectures - comparisons

Text Books

1. Hamacher C.V, Computer Organisation, McGraw Hill.
2. Morris Mano, Computer system architecture, Pearson.
3. John P Hayes, Computer Architecture and Organization McGraw Hill.

Reference Books

1. William Stallings, Computer Architecture and Organization, Pearson.
2. Patterson D. A & Hennessy J. L, Computer Organization & Design, Morgan Kaufman.

NEHRU COLLEGE OF ENGINEERING RESEARCH CENTRE THRISSUR
PRINCIPAL
Nehru College of Engineering and Research Centre
Pampady, Thiruvilwamala, Thrissur Dt
Pin 680 597 Kerala

Internal Continuous Assessment *(Maximum Marks-50)*

60% - Tests (minimum 2)
30% - Assignments (minimum 2) such as home work, problem solving, group discussions, quiz, literature survey, seminar, term-project, software exercises, etc.
10% - Regularity in the class

University Examination Pattern

PART A: *Analytical/problem solving SHORT questions* — *8x 5 marks=40 marks*

Candidates have to answer EIGHT questions out of TEN. There shall be minimum of TWO and maximum of THREE questions from each module with total TEN questions.

PART B: *Analytical DESCRIPTIVE questions* — *4 x 15 marks=60 marks*

Two questions from each module with choice to answer one question.

Maximum Total Marks: 100

NEHRU COLLEGE OF ENGINEERING & RESEARCH CENTRE

PRINCIPAL
Nehru College of
Engineering and Research Centre
Pampady, Thiruvilwamala, Thrissur Dt
Pin 680 597, Kerala

EC14 502: LINEAR INTEGRATED CIRCUITS

Teaching scheme **Credits:** 4

3 hours lecture and 1 Hour tutorial per week

Objectives

- *To develop the skill of analysis and design of various circuits using operationalamplifiers*
- *To develop designskills to design various circuits using different data conversion systems*

Module I (14 hours)

Various stages of an operational amplifier - simplified schematic circuit of op-amp 741 - need for compensation - lead, lag and lead- lag compensation schemes - typical op-amp parameters - slew rate - power supply rejection ratio - open loop gain - unity gain bandwidth - offset current & offset voltage

Linear Op-Amp circuits – basic configurations-ideal Op-Amp circuit analysis –The 741 Op-Amp circuit parameters-DC analysis –small signal analysis –Gain ,frequency response and slew rate of the 741 –summing and different amplifiers-Differentiator and integrator –I-V and V-I converters-Instrumentation amplifier, isolation amplifier - log and antilog amplifiers analog multipliers – Voltage Comparators-Schmitt trigger

Module II (14 hours)

Signal generators-Phase shift and Wien Bridge Oscillators-Astable and Monostable Circuits-Linear sweep circuits.

Active filters-filter transfer function-Butterworth and Chebyshev filters-First order and second order function for low-pass, high-pass, band –pass, band-stop and all –pass filters- Sallen-key LPF and HPF-Delyiannis-Friend band Pass filters-twin –tee notch filter-Second order LCR Resonator and realizations of various types-Filters based on inductor replacement-switched capacitor filters

Module III (14 hours)

Timer IC 555 – internal diagram – working - multivibrators with timer IC 555

Data converters-definitions and specifications – DAC - Weighted resistor and R-2R DAC-Bipolar DAC.

ADC - flash, integrating type, Counter Ramp, pipeline, tracking and Successive approximation, dual slope & oversampling ADCs - sigma - delta ADC

Linear voltage regulators- protection mechanisms-LM 723 Functional-diagram-Design of voltage regulator using 723-Three terminal Voltage regulators-functional operation of 78xx series IC and design of fixed and adjustable regulators

Module IV (10 hours)

Phase locked loops- operation of first and second order PLLs-Lock and Capture range-LM565PLL-Application of PLL as AM/FM/FSK/ detectors, frequency translators, phase shifter, tracking filter, signal synchronizer and frequency synthesizer. Voltage controlled oscillator

NEHRU COLLEGE OF ENGINEERING & RESEARCH CENTRE THIRUVILWAMALA THRISSUR

PRINCIPAL
Nehru College of
Engineering and Research Centre
Pampady, Thiruvilwamala, Thrissur dt
Pin 680 597, Kerala

Text Books

1. Sergio Franco , *Design with Operational Amplifiers& Analog integrated Circuits*; McGraw Hil
2. Jacob Baker R., Li H.W. & Boyce D.E., *CMOS- Circuit Design, Layout & Simulation*', PHI
3. Fiore J.M., *Operational Amplifiers and Linear Integrated Circuits*, JaicoPublishing House
4. Gayakwad, *Operational Amplifiers*, Jaico Publishing House

Reference Books

1. Roy Choudari.'Linear Integrated Circuits'
2. Coughlin R.F. & Driscoll F.F., *Operational Amplifiers and Linear IntegratedCircuits,* Pearson Education
3. Schumann & Valkenberg, *Design of Analog Filters*, Oxford University Press
4. Gray & Meyer, *Analysis and Design of Analog Integated Circuits*; John Wiley
5. Sedra A.S. & Smith K.C., *Microelectronic Circuit*', Oxford University Press

Internal Continuous Assessment *(Maximum Marks-50)*

60% - Tests (minimum 2)
30% - Assignments (minimum 2) such as home work, problem solving, group discussions, quiz, literature survey, seminar, term-project, software exercises, etc.
10% - Regularity in the class

University Examination Pattern

PART A: Analytical/problem solving SHORT questions *8x 5 marks=40 marks*

Candidates have to answer EIGHT questions out of TEN. There shall be minimum of TWO and maximum of THREE questions from each module with total TEN questions.

PART B: Analytical/Problem solving DESCRIPTIVE questions 4 x 15 marks=60 marks

Two questions from each module with choice to answer one question.

Maximum Total Marks: 100

NEHRU COLLEGE OF ENGINEERING & RESEARCH CENTRE THIRUVILWAMALA THRISSUR DT

PRINCIPAL
Nehru College of
Engineering and Research Centre
Pampady, Thiruvilwamala, Thrissur Dt
Pin 680 597 Kerala

EC14 503 DIGITAL COMMUNICATION

Teaching scheme **Credits: 4**

3 hours lecture and 1 hour tutorial per week

Objectives

- *To impart the basic concepts of various digital modulation schemes*
- *To develop understanding about digital transmitters & Receivers*

Module I (13 hours)

Sampling Theory and Practice - Ideal Sampling and Reconstruction - Practical Sampling and Aliasing - Flat-Top Sampling - Sampling theorem for bandpass signals - Waveform coding - quantization - PCM - DPCM - delta modulation - adaptive delta modulation - line coding schemes- ON-OFF, NRZ, Bipolar, Manchester signalling and differential encoding.

Module II (13 hours)

Shaping - Nyquist criterion for zero ISI - signalling with duobinary pulses - eye diagram- equalizer, scrambling and descrambling - signal space concepts -geometric structure of the signal space - L^2 space-distance, norm and inner product -orthogonality-base band data transmission- matched filter receiver - intersymbol interference - Gram-Schmidt orthogonalization procedure.

Module III (13hours)

Review of Gaussian random process - optimum threshold detection - optimum receiver for AWGN channel - matched filter and correlation receivers - decision procedure - maximum a- posteriori probability detector - maximum likelihood detector - probability of error - bit error rate - Optimum receiver for coloured noise- carrier and symbol synchronisation.

Module IV (13 hours)

Digital modulation schemes - coherent binary schemes - ASK, FSK, PSK, MSK coherent M-array schemes - calculation of average probability of error for different modulation schemes - power spectra of digitally modulated signals - performance comparison of different digital modulation schemes.

Text Books

1. Sklar, Digital Communication, Pearson Education.
2. Bruce Carlson., Communication Systems, Tata - McGraw Hill
3. Taub H. & Schilling, Principles of Communication Systems, Tata - McGraw Hill.
4. Proakis J.G., Digital Communications, McGraw Hill.
5. Leon W. Couch, Digital and Analog Communication Systems, PearsonEducation

NEHRU COLLEGE OF ENGINEERING & RESEARCH CENTRE THIRUVILWAMALA THRISSUR DT.

PRINCIPAL
Nehru College of
Engineering and Research Centre
Pampady, Thiruvilwamala, Thrissur Dt
Pin 680 597 Kerala

Reference Books

1. Simon Haykin, Communication Systems, John Wiley.
2. Dennis Roddy, John Coolen, Electronic Communications, Pearson Education
3. Sam Shanmugam K., Digital and Analog Communication Systems, John Wiley.
4. Glover and Grant, Digital Communications, Pearson Education.
5. Rice, Digital Communications, Pearson Education.
6. Proakis and Salehi., Fundamentals of Communication Systems, Pearson Education.
7. Lathi B.P., Modern Digital and Analog Communication Systems, Oxford University Press.
8. M. K. Simon, S. M. Hinedi, and W. C. Lindsey, Digital Communication Techniques, Prentice Hall
9. Tri T. Ha, Theory and Design of Digital Communication Systems, Cambridge University Press

Web resources:

1. Digital Communication, Prof. Bikash Kumar Dey, IIT Bombay(nptel.iitm.ac.in)\
2. Digital Communication, Prof. SaswatChakrabarti, Prof.R.V. Rajakumar, IIT Kharagpur (nptel.iitm.ac.in)
3. Principles of Digital Communications I, Prof. LizhongZheng, Prof. Robert Gallager, MIT

Internal Continuous Assessment *(Maximum Marks-50)*

60% - Tests (minimum 2)
30% - Assignments (minimum 2) such as home work, problem solving, group discussions, quiz, literature survey, seminar, term-project, software exercises, etc.
10% - Regularity in the class

University Examination Pattern

PART A: Analytical/problem solving SHORT questions *8x 5 marks=40 marks*

Candidates have to answer EIGHT questions out of TEN. There shall be minimum of TWO and maximum of THREE questions from each module with total TEN questions.

PART B: Analytical/Problem solving DESCRIPTIVE questions 4 x 15 marks=60 marks

Two questions from each module with choice to answer one question.

Maximum Total Marks: 100

PRINCIPAL
Nehru College of
Engineering and Research Centre
Pampady, Thiruvilwamala, Thrissur Dt
Pin 680 587 Kerala

EC14 504: ELECTROMAGNETIC FIELD THEORY

Teaching scheme **Credits:** 4
3 hours lecture and 1 hour tutorial per week

Objectives

- *To impart the knowledge of electric, magnetic fields and the equations governing them as well as time varying field*
- *To develop understanding about guided waves & transmission lines*

Module I (13hours)
Review of vector analysis: Cartesian, Cylindrical and Spherical co-ordinates systems- Co-ordinate transformations. Vector fields: Divergence and curl- Divergence theorem- Stokes theorem.
Static electric & Magnetic field: Gauss's law. Electrical scalar potential- different types of potential distribution- Potential gradient- Energy stored-Boundary conditions Capacitance-Steady current and current density in a conductor-Equation of continuity- energy stored in magnetic fields- Magnetic dipole-Amperes law for a current element. Electric and Magnetic boundary conditions- vector magnetic potential-Magnetic field intensity.

Module II (13 hours)
Maxwell's equations and travelling waves: conduction current and displacement current- Maxwell's equations- Plane waves- Poynting theorem and Poynting vector- Plane electromagnetic waves- Solution for free space condition- Uniform plane wave-wave equation for conducting medium- Wave polarization- Poisson's and Laplace equations. Linear, elliptical and circular polarization.

Module III (14 hours)
Guided waves between parallel planes- transverse electric and transverse magnetic waves and its characteristics, wave equations for conducting medium, wave propagation in conductors and dielectric, depth of penetration, reflection and refraction of plane waves by conductor and dielectric, Poynting vector and flow of power.

Module IV (12hours)
Transmission lines & Waveguides: -Transmission line equations- transmission line parameters- Skin effect- VSWR- Characteristic impedance- Stub matching- Smith chart - Phase velocity and group Velocity. Theory of waveguide transmission-Rectangular waveguides- TE modes-TM modes- mathematical analysis- circular wave guide- modes of propagation- dominant modes- cut off wave length cavity resonators-applications.

Text Books

1. Elements of Electromagnetics– Mathew N.O. Sadiku, Oxford Pub, 3rd Edition
2. Engineering Electromagnetics – W.H. Hayl, Tata Mc Graw Hill Edition, 5th Edition
3. Introduction to Electrodynamics– David J. Griffithe, Prentice Hall India, 3rd Edition
4. Electromagnetic waves and Radiating Systems:Edward C jordan,Keith G. Balman

Reference Books

1. Electromagnetics: J. D. Kraus, Mc Graw Hill Publications.
2. Field & Wave Electromagnetic: Cheng, Pearson Education.
3. Electromagnetics: Edminister, Schaum series, 2 Edn.
4. Network Analysis: Van Valkenberg

PRINCIPAL
Nehru College of
Engineering and Research Centre
Pampady, Thiruvilwamala, Thrissur Dt
Pin 680 597, Kerala

Internal Continuous Assessment *(Maximum Marks-50)*

60% - Tests (minimum 2)
30% - Assignments (minimum 2) such as home work, problem solving, group discussions, quiz, literature survey, seminar, term-project, software exercises, etc.
10% - Regularity in the class

University Examination Pattern

PART A: Analytical/problem solving SHORT questions *8x 5 marks=40 marks*

Candidates have to answer EIGHT questions out of TEN. There shall be minimum of TWO and maximum of THREE questions from each module with total TEN questions.

PART B: Analytical/Problem solving DESCRIPTIVE questions 4 x 15 marks=60 marks

Two questions from each module with choice to answer one question.

Maximum Total Marks: 100

NEHRU COLLEGE OF ENGINEERING & RESEARCH CENTRE THIRUVILWAMALA THRISSUR-DT.

PRINCIPAL
Nehru College of
Engineering and Research Centre
Pampady, Thiruvilwamala, Thrissur Dt
Pin 680 597 Kerala

EC14 505: MICROPROCESSORS AND MICROCONTROLLERS

Teaching scheme **Credits:** 4

3 hours lecture and 1 hour tutorial per week

Objectives

- *To introduce the student with knowledge about architecture, interfacing and programming with 8086 microprocessors and 8051 microcontrollers. It gives a brief introduction to ARM 7 and ARM 9 micro controllers.*
- *After studying this subject, the student should be able to design microprocessor/controller based system for any relevant applications.*

Module I (13 hours)

Brief history of Microprocessors, Von Neumann and Harvard architecture-Distinction between CISC and RISC computers Intel 8086 processor- Internal Architecture of 8086 /8088 microprocessors- Bus Interface Unit(BIU) and Execution Unit(EU) - Address space, Data organization, registers, memory segmentation and addressing, stack, I/O space Programming concepts- Assembly programming using instructions for data transfer ,arithmetic, logical , shift and rotate operations and string manipulations -Procedures-Macros-ASCII operation- use of
MASM

Module II (13 hours)

Hardware structure of 8086 microprocessor -minimum and maximum mode-basic read and write machine cycle timing- Coprocessor and Multiprocessor configuration - hardware organization of address space-control signals and I/O interfaces- Memory devices, circuits and sub system design - various types of memories, memory address decoding -Interrupts

Module III (13 hours)

I/O interfacing circuits -Hand shaking, serial and parallel interfacing-Address decoding-Interfacing chips-Programmable peripheral interfacing (8255)-Internal block diagram-Modes of operation Programmable communication interface(8251)-Basics of serial communication-Internal block diagram of 8251 Programmable timer(8253)- Internal block diagram of 8253-Different Modes DMA controller(8237/8257)-Internal block diagram- Programmable interrupt controller(8259)- features - Internal block diagram-Interrupt sequence for an 8086 based system-Keyboard display interface(8279)- Keyboard interface-Display interface

Module IV (13 hours)

Intel 8051 microcontroller -Architecture-Program and Data memory organization- Addressing modes-Software overview-Ports-Timer-Interrupt- Serial port-Introduction to ARM processors - features of ARM 7 and 9 processors

PRINCIPAL
Nehru College of
Engineering and Research Centre
Pampady, Thiruvilwamala, Thrissur Dt
Pin 680 597 Kerala

Text Books

1. Lyla B Das, The x86 Microprocessors Architecture, Programming and Interfacing (8086 to Pentium)
2. Muhammad Ali Mazidi, Janice Gillispie Mazidi and Rolin D Mckinlay.' The 8051 Microcontrollers and Embedded Systems using Assembly and C ‖ 2nd Edition Pearson Publishers.
3. Triebal W A & Singh A., The 8088 and 8086 microprocessors McGraw Hill
4. Andrew N. Sloss, Dominic Sysmes, Chris Wright - Arm System Developers Guide-Designing and Optimizing System software, Morgan Kaufmann Publishers

Reference Books

1. Intel Data Book vol.1, Embedded Microcontrollers and Processors.
2. Hall D.V., Microprocessors and Interfacing McGrawHill.
3. Mohammed R., Microprocessor & Microcomputer based system design, Universal Book Stall.

Internal Continuous Assessment *(Maximum Marks-50)*

60% - Tests (minimum 2)
30% - Assignments (minimum 2) such as home work, problem solving, group discussions, quiz, literature survey, seminar, term-project, software exercises, etc.
10% - Regularity in the class

Note: One of the assignments shall be simulation of VHDL programs

University Examination Pattern

PART A: Analytical/problem solving SHORT questions *8x 5 marks=40 marks*

Candidates have to answer EIGHT questions out of TEN. There shall be minimum of TWO and maximum of THREE questions from each module with total TEN questions.

PART B: Analytical/Problem solving/ DESCRIPTIVE questions 4 x 15 marks=60 marks

Two questions from each module with choice to answer one question.

Maximum Total Marks: 100

NEHRU COLLEGE OF ENGINEERING & RESEARCH CENTRE THRISSUR DT.

PRINCIPAL
Nehru College of
Engineering and Research Centre
Pambady, Thiruvilwamala, Thrissur Dt.

Note: One of the assignments shall be simulation of continuous systems using any technical computing software

University Examination Pattern

PART A: Analytical/problem solving SHORT questions *8x 5 marks=40 marks*

Candidates have to answer EIGHT questions out of TEN. There shall be minimum of TWO and maximum of THREE questions from each module with total TEN questions.

PART B: Analytical/Problem solving DESCRIPTIVE questions 4 x 15 marks=60 marks

Two questions from each module with choice to answer one question.

Maximum Total Marks: 100

PRINCIPAL
Nehru College of
Engineering and Research Centre
Pampady, Thiruvilwamala, Thrissur
Dist. 680 597, Kerala

EC14 601: RADIATION AND PROPAGATION

Teaching scheme **Credits:** 4
3 hours lecture and 1 hour tutorial per week

Objective

- *To impart the basic concepts of radiating structures and their arrays*
- *To give understanding about analysis and synthesis of arrays*
- *To give idea about basic propagation mechanisms*

Module I (13 hours)

Retarded potentials: Radiation, retarded potential -Radiation from an A.C current element-monopoles and dipoles-power radiated from a dipole

Antenna Parameters: Introduction, Isotropic radiators, Radiation pattern, Gain -radiation intensity-Directive gain, Directivity, antenna efficiency - Reciprocity theorem & its applications, effective aperture, radiation resistance, terminal impedance, noise temperature, elementary ideas about self &mutual impedance, front-to-back ratio, antenna beam width, antenna bandwidth, antenna beam efficiency, antenna beam area or beam solid angle, polarization, antennatemperature.

Module II (13 hours)

Antenna Arrays: Introduction, various forms of antenna arrays, arrays of point sources, non-isotropic but similar point sources, multiplication of patterns, arrays of n-isotropic sources of equal amplitude and spacing (Broad-side & End-fire array cases), array factor, directivity and beam width, array of n-isotropic sources of equal amplitude and spacing end-fire array with increased directivity, scanning arrays, Dolph-Tchebysceff arrays, tapering of arrays, binomial arrays, continuous arrays, rectangular arrays, superdirective arrays.

Module III (13 hours)

VLF, LF and MF antennas- Introduction, effects of ground on antenna performance, effects of antenna height, efficiency of electrically short antenna, medium frequency antennas, high frequency antennas, fundamental antenna (i.e. half wave dipole or dipole antenna), long wire antenna, V and inverted V antenna,
Rhombic antenna, traveling wave antenna, radio direction finders, loop antennas,

VHF, UHF, SHF Antennas- Introduction. Folded dipole antenna, Yagi-Uda antenna, and helical antenna, slot antenna, microstrip or patch antennas, and turnstile antenna, frequency independent antennas- log periodic antenna, and microwave antennas- Microstrip antenna, fractal antenna.

Module IV (13 hours)

Factors involved in the propagation of radio waves: the ground wave-Reflection of radio waves by the surface of the earth-space wave propagation-considerations in space wave propagation-atmospheric effects in space wave propagation-ionosphere and its effects on radio waves -mechanism of ionosphere propagation-refraction and reflection of sky waves by ionosphere-ray paths-skip distance-maximum usable frequency-vertical and oblique incidence-fading of signals - selective fading-diversity reception, Duct Propagation.

Text books:

1. Electromagnetic waves & Radiating Systems– Jordan & Balman, Prentice Hall India
2. Warren L Stutzman and Gary A Thiele, —Antenna Theory and Design||, 2ndEd, John Wiley and Sons Inc. 1998
3. Constantine A. Balanis: —Antenna Theory- Analysis and Design||, Wiley India, 2nd Edition, 2008.

PRINCIPAL
Nehru College of
Engineering and Research Centre
Pampady, Thiruvilwamala, Thrissur Dt
Pin - 680 597, Kerala

Reference Books

1. Kraus, —Antennas||, Tata McGraw Hill, NewDelhi, 3|| Edition,2003

Internal Continuous Assessment *(Maximum Marks-50)*

60% - Tests (minimum 2)
30% - Assignments (minimum 2) such as home work, problem solving, group discussions, quiz, literature survey, seminar, term-project, software exercises, etc.
10% - Regularity in the class

University Examination Pattern

PART A: Analytical/problem solving SHORT questions *8x 5 marks=40 marks*

Candidates have to answer FIVE questions out of EIGHT. There shall be minimum of TWO and maximum of THREE questions from each module with total TEN questions.

PART B: Analytical/Problem solving DESCRIPTIVE questions 4 x 15 marks=60 marks

Two questions from each module with choice to answer one question.

Maximum Total Marks: 100

PRINCIPAL
Nehru College of
Engineering and Research Centre
Pampady, Thiruvilwamala, Thrissur
Pin 680 597 Kerala

Text Books

1. G. Keiser, 'Optical Fiber Communication', 3rd Edition, Tata Mc Graw Hill new delhi, 2000
2. John M.Senior . _Optical Fiber Communication Principles & Practice' ,PHI Publication
3. D.F. Mynbaev and L. Scheiner . 'Fiber Optic Communication Techniques', Person Education New Delhi

Text Books

1. Optical Electronics:Ajoy Ghatak, K Thyagarajan
2. Textbook on Optical Fiber Communicaton and its Applications:S.C.Gupta

Internal Continuous Assessment *(Maximum Marks-50)*

60% - Tests (minimum 2)
30% - Assignments (minimum 2) such as home work, problem solving, group discussions, quiz, literature survey, seminar, term-project, software exercises, etc.
10% - Regularity in the class

University Examination Pattern

PART A: Analytical/problem solving SHORT questions — *8x 5 marks=40 marks*

Candidates have to answer EIGHT questions out of TEN. There shall be minimum of TWO and maximum of THREE questions from each module with total TEN questions.

PART B: Analytical/Simple Problem solving DESCRIPTIVE questions — *4 x 15 marks=60 marks*

Two questions from each module with choice to answer one question.

Maximum Total Marks: 100

NEHRU COLLEGE OF ENGINEERING & RESEARCH CENTRE THIRUVILWAMALA THRISSUR

PRINCIPAL
Nehru College of
Engineering and Research Centre
Pin 680 597 Kerala

Text Books

1. Weste & Harris, *CMOS VLSI Design*, Pearson Education
2. Plummer, Deal & Griffin, *Silicon VLSI Technology*, Pearson Education
3. Rabaey J.M., *Digital Integrated Circuits - A Design Perspective*, Pearson Education
4. Weste & Eshraghian , *Principles of CMOS VLSI Design*, Addison Wesley
5. S K Gandhi, *VLSI Fabrication Principles*., John Wiley
6. Sung-Mo Kang & Yusuf Leblebici, *CMOS Digital Integrated Circuits - Analysis & Design*, McGrawHill
7. Nagchoudari., *Principles of Microelectronic Technology*, Wheeler Publishing

Reference Books

1. Yuan Taur & Ning T.H., *Fundamentals of Modern VLSI Devices*, Cambridge Univ. Press
2. Baker. Li & Boyce, *CMOS - Circuit Design, Layout & Simulation*, PHI
3. Sze S M, *VLSI Technology*, McGrawHill
4. Ken Martin, *Digital Integrated Circuit Design*, Oxford Univ. Press
5. Eshraghian & Pucknell,, *Essentials of VLSI Circuits & Systems*, PHI

Internal Continuous Assessment *(Maximum Marks-50)*

60% - Tests (minimum 2)
30% - Assignments (minimum 2) such as home work, problem solving, group discussions, quiz, literature survey, seminar, term-project, software exercises, etc.
10% - Regularity in the class

University Examination Pattern

PART A: Analytical/problem solving SHORT questions — *8x 5 marks=40 marks*

Candidates have to answer EIGHT questions out of TEN. There shall be minimum of TWO and maximum of THREE questions from each module with total TEN questions.

PART B: Analytical/ DESCRIPTIVE questions — *4 x 15 marks=60 marks*

Two questions from each module with choice to answer one question.

Maximum Total Marks: 100

NEHRU COLLEGE OF ENGINEERING & RESEARCH CENTRE THIRUVILWAMALA THRISSUR DT

PRINCIPAL
Nehru College of
Engineering and Research Centre
Pambady, Thiruvilwamala, Thrissur Dt
Pin 680 597, Kerala

EC14 604: DIGITAL SIGNAL PROCESSING

Teaching scheme **Credits:** 4

3 hours lecture and 1 hour tutorial per week

Objectives

- *To impart basic ideas (i) in the transforms used in digital domain (ii) in the design and hardware realization of digital filters*

Module I (13 hours)

Review of Discrete Time Fourier series and Discrete Time Fourier Transform-Frequency do- main sampling- Discrete Fourier Transform-Properties-Circular convolution-Linear convolution using DFT-Linear filtering of long data sequences- Overlap add and overlap save methods- Computation of DFT-Decimation in Time and Decimation in Frequency algorithms.

Module II (13 hours)

Structures for realization of discrete time systems-Signal flow graph representation- structures for FIR and IIR systems-direct form, cascade form, parallel form-lattice and transposed structures-Representation of numbers & errors due to rounding and truncation-Quantization of filter coefficients-round off effects in digital filters-Limit cycle oscillations, scaling to prevent overflow

Module III (13 hours)

Design of Digital filters-Types of digital filters -FIR and IIR filters -specifications of digital Filters-Design of FIR filters -Linear phase Characteristics-Window method, Optimal method and Frequency Sampling method-Design of IIR filters from analog filters -Impulse invariant and bilinear transformation methods- Frequency transformation in the analog and digital domains

Module IV (13 hours)

Computer Architectures for signal processing-Harvard Architecture, Pipelining, Multiplier-Accumulator, Special Instructions for DSP, extended parallelism-General Purpose DSP Processors-Implementation of DSP Algorithms for various operations-Special purpose DSP hardware-Hardware Digital filters and FFT processors-Case study and overview of TMS320 series processor, ADSP 21XX processor

Text Books

1. Oppenheim A. V., Schafer R. W., Discrete-Time Signal Processing, Prentice Hall/Pearson.
2. John G. Proakis, Dimitris G. Manolakis, Digital Signal Processing: Principles, Algorithms and Applications, Prentice Hall of India Pvt. Ltd., 1997.
3. Emmanuel C. Ifeacher, Barry W. Jervis, Digital Signal Processing: A Practical Approach, Pearson Education 2004
4. Li Tan,DSP-Fundamentals & Applications, Elsevier, New Delhi, 2008
5. Roberto Cristi, Modern Digital Signal Processing, Cengage learning India pvt. Ltd.,2004,4th Indian reprint 2009, New Delhi

PRINCIPAL
Nehru College of
Engineering and Research Centre
Pidavaly, Thiruvilwamala, Thrissur Dt
Pin 680 587 Kerala

Reference Books

1. Mitra S. K., Digital Signal Processing : A Computer Based Approach, Tata McGraw-Hill
2. B Venkataramani & M.Bhaskar, Digital Signal Processors-Architecture,3. Programming and Applications, Tata Mcgraw Hill
3. Dag Strannbby & William Walker,DSP & Applications. Elsevier, New Delhi, 2nd Ed. 2004
4. Vinay K Ingle, John G Proakis, DSP- A MATLAB based approach ,Cengage learning India
5. Sen M. Kuo and Woon-Seng Gem, Digital Signal Processors, Pearson

Internal Continuous Assessment *(Maximum Marks-50)*

60% - Tests (minimum 2)
30% - Assignments (minimum 2) such as home work, problem solving, group discussions, quiz, literature survey, seminar, term-project, software exercises, etc.
10% - Regularity in the class

University Examination Pattern

PART A: Analytical/problem solving SHORT questions *8x 5 marks=40 marks*

Candidates have to answer EIGHT questions out of TEN. There shall be minimum of TWO and maximum of THREE questions from each module with total TEN questions.

PART B: Analytical/Problem solving DESCRIPTIVE questions 4 x 15 marks=60 marks

Two questions from each module with choice to answer one question.

Maximum Total Marks: 100

NEHRU COLLEGE OF ENGINEERING & RESEARCH CENTRE

PRINCIPAL
Nehru College of
Engineering and Research Centre
Pampady, Thiruvilvamala, Thrissur Dt
Pin - 680 597, Kerala

EC14 605: CONTROL SYSTEMS

Teaching scheme **Credits:** 4
3 hours lecture and 1 hour tutorial per week

Objective

- *To impart the basic theory behind the analysis of continuous anddiscrete Systems in time and frequency domains*
- *To introduce concepts about the state space modeling of systems.*

Module I (13 hours)
General Schematic Diagram of Control Systems-Open loop and Closed loop systems – Merits and demerits-Concepts of feed back –Role of computers in Automatic Control –Modeling of Continuous Time Systems. Basic ideas of Functions of Complex Variables ,Mapping Process, Analytic functions, poles and zeros.
Transfer functions-block diagrams-order and type-signal flow graph –Mason's Gain formula-Block diagram reduction using direct techniques and signal flow graphs –examples-derivation of transfer function of simple systems from physical relations -low pass RLC series network –spring mass damper –DC servomotor for position and speed control –low pass active filter

Module II (13 hours)
1. Time Domain analysis:

Analysis of Continuous Time systems-Transient and steady State Responses-Standard Test Signals-Response comparisons for various Root locations in the S-plane-Time Domain Solutions of First order systems- Step Response of Second order system –Time domain specifications –Relationships between Damping ratio and the amount of Overshoot for a second Order system - Effects of derivative and Integral Control on the Transient response - Performance of feed back Control systems - Steady state Response-steady state error –computations of steady state error –error constants - Concepts of Stability –Routh-Hurwitz Criterion - Construction of root locus.

2. Frequency Domain Analysis:

Frequency Domain Plots-Polar and Bode Plots-Theory of Nyquist Criterion Frequency Response characteristics- Frequency domain specifications- computation of gain and phase Margins from Bode Plot - Theory of Lag,Lead, and Lag-Lead compensators.

Module III (13 hours)
Modeling of discrete-time systems-sampling-mathematical derivations for sampling-sample and hold--solutions of difference Equations using Z-transforms-example of sampled data systems –mapping between s plane and z plane –cyclic and multi-rate sampling (definitions only) –analysis of discrete time systems-pulse transfer function-examples-stability –Jury's criterion –bilinear transformation-stability analysis after bilinear transformation –stability analysis Routh-Hurwitz techniques-

Module IV (13 hours)
State Space Analysis: Introduction-Definitions and explanations of the terms STATE, STATE VARIABLES, STATE VECTOR AND STATE SPACE-State Space Representations of Linear Time-invariant System with i) single input and output ii) multi variable systems iii) SISO System in which forcing
Function involves-Eigen values-phase variable and Diagonal forms-Invariance of Eigen values under linear transformation-Diagonilisation
Solutions of Linear Time-invariant State Equations-Homogeneous and Non-homogeneous case(example up to second order only)- Matrix Exponential- Laplace Transform approach to the

PRINCIPAL
Nehru College of
Engineering and Research Centre

solutions of state equations-State Transition Matrix-properties.
State Space representation of Discrete Time Systems-Relation between Transfer function /Transfer

PRINCIPAL
Nehru College of
Engineering and Research Centre
Thiruvilwamala Thrissur
Pin 680 597 Kerala

EC14 606 SATELLITE COMMUNICATION

Teaching scheme **Credits:** 4
3 hours lecture and 1 hour tutorial per week

Objectives

- *To impart the basic concepts of satellite communication and systems*
- *To develop understanding about the link design and the latest trends in satellite communication*

Module I (13 hours)
Satellite Orbits: Orbital mechanics-Kepler's laws, locating the satellite in orbit,orbital elements; look angle determination-subsatellite point, azimuth and elevation angle calculation;orbital perturbations-longitudinal and inclination changes; launches and launch vehicles-ELVs, placing satellites into geostationary orbit;orbital effects in communication system performance-doppler shift, range variations, solar eclipse, sun transit outage

Module II (13 hours)
Communication Satellites- Satellite subsystem; Attitude and orbit control system (AOCS); Telemetry, Tracking, Command and Monitoring (TTC&M); power systems; communications subsystem-description, transponders; satellite antennas-basic antenna types, satellite antennas in
practice

Module III (13hours)
Satellite link design and Satellite access- Basic transmission theory, system noise temperature and G/T ratio; Downlink design-link budget; Uplink design; design for specified C/N, uplink and downlink attenuation in rain, communication link design procedure; system designexamples.

Module IV(13 hours)
Multiple access schemes-FDMA, TDMA, CDMA, DAMA; VSAT systems-basic techniques, VSAT earth station engineering, system design; DBS systems-C-band and Ku0band home TV, digital DBS; satellite mobile systems; GPS

Text Books

1. Timothy Pratl, Charles Bostian & Jeremy Allnutt,' Satellite communications',2nd Ed., Wiley India, New Delhi, 2008
2. Dennis Roddy, _Satellite Communications', 4th Ed., Tata Mc-Graw-Hill, New Delhi,2009
3. Tri T. Ha, _Digital Satellite Communications' , 2nd Ed., Tata Mc-Graw-Hill, New Delhi, 2009

Internal Continuous Assessment *(Maximum Marks-50)*

60% - Tests (minimum 2)
30% - Assignments (minimum 2) such as home work, problem solving, group discussions, quiz, literature survey, seminar, term-project, software exercises, etc.
10% - Regularity in the class

PRINCIPAL
Nehru College of
Engineering and Research Centre
Pampady, Thiruvilwamala, Thrissur Dt
Pin 680 597 Kerala

University Examination Pattern

PART A: Analytical/problem solving SHORT questions — *8x 5 marks=40 marks*

Candidates have to answer EIGHT questions out of TEN. There shall be minimum of TWO and maximum of THREE questions from each module with total TEN questions.

PART B: Analytical/ DESCRIPTIVE questions — *4 x 15 marks=60 marks*

Two questions from each module with choice to answer one question.

Maximum Total Marks: 100

NEHRU COLLEGE OF ENGINEERING & RESEARCH CENTRE
PAMPADY
THIRUVILWAMALA
THRISSUR DT.

PRINCIPAL
Nehru College of
Engineering and Research Centre
Pampady, Thiruvilwamala, Thrissur Dt
Pin - 680 597, Kerala

EC14 701 INFORMATION THEORY AND CODING

Teaching scheme **Credits:** 4
3 hours lecture and 1 hour tutorial per week

Objective

- *To provide basic concepts of Information theory*
- *To enable the students to propose, design and analyse suitable coding/decoding scheme for a particular digital communication application*

Module I (12 Hours)
Information theory-information and entropy-properties of entropy - entropy of a binary memoryless source- extension of a memoryless source-source coding theorem-Shannon-Fano coding- Huffman coding-Lempel-Ziv coding - discrete memoryless channel - binary symmetric channel- mutual information - properties - channel capacity- channel coding theorem.

Module II (14 Hours)
Introduction to algebra-groups- fields -binary field arithmetic- construction of Galois field GF(2m)- basic properties of Galois field GF(2m)- properties of minimal polynomial - computations using GF(2m) arithmetic-vector spaces-matrices - Linear Block Codes -generator matrices-parity check matrices-
encoder for linear systematic code-syndrome and error correction-minimum distance- error correction and error detection capabilities.

Module III (13 Hours)
Cyclic Codes: polynomial description-algebraic properties – generator and parity check matrices of cyclic codes- encoding of cyclic codes-syndrome computation-error detection - decoding of cyclic codes- Binary Primitive BCH codes-generator polynomial -parity check matrix- decoding of BCH codes, nonbinary BCH Codes- Reed Solomon codes- basic concepts of coding and decoding

Module IV (13 Hours)
Coding - convolutional codes- binary non-systematic feed forward encoder -generator matrix- time domain and transform domain representation- state diagram and Trellis diagram representation of convolutional codes- distance properties of convolutional codes- maximum likelihood decoding- Viterbi decoding- interleaved convolutional codes.

Text Books

1. Simon Haykin, Communication Systems,John Wiley
2. ShuLin, Daniel J Costello.Jr, Error Control Coding, 2nd edition., Pearson

Reference Books

1. Das J.Malik A.K.,ChatterjeeP.K.,Principles of DigitalCommunications, NewAge International
2. Simon Haykin, Digital Communications, John Wiley
3. Taub & Schilling, Principles of Communication System,TATA McGraw Hill
4. Symon Haykins and Michael Moher, Modern Wireless Communication,Pearson Education
5. Sklar, Digital Communications, Pearson Education
6. Couch, Digital and Analog Communication System, Pearson Education

PRINCIPAL
Nehru College of
Engineering and Research Centre
Thevilwamala Thrissur Dt
Pin 680 597 Kerala

Internal Continuous Assessment *(Maximum Marks-50)*

60% - Tests (minimum 2)
30% - Assignments (minimum 2) such as home work, problem solving, group discussions, quiz, literature survey, seminar, term-project, software exercises, etc.
10% - Regularity in the class

University Examination Pattern

PART A: Analytical/problem solving SHORT questions *8x 5 marks=40 marks*

Candidates have to answer EIGHT questions out of TEN. There shall be minimum of TWO and maximum of THREE questions from each module with total TEN questions.

PART B: Analytical/Problem solving DESCRIPTIVE questions 4 x 15 marks=60 marks

Two questions from each module with choice to answer one question.

Maximum Total Marks: 100

NEHRU COLLEGE OF ENGINEERING & RESEARCH CENTRE
PAMPADY
THIRUVILWAMALA
THRISSUR DT.

PRINCIPAL
Nehru College of
Engineering and Research Centre
Pampady, Thiruvilwamala, Thrissur Dt
Pin - 680 597, Kerala

EC14 702 MICROWAVE ENGINEERING

Teaching scheme **Credits:** 4

3 hours lecture and 1 hour tutorial per week

Objectives

- *To give the basic ideas about the characteristics and applications of microwave frequency bands*
- *To understand the working of various microwave passive and active devices and circuits.*

Module I (13 hours)

Characteristic, features and applications of microwaves- Scattering matrix representation of microwave networks, properties of scattering matrices, properties and s-matrices for typical network such as section of uniform transmission line, 3-port networks (reciprocal and nonreciprocal), T-junctions, directional coupler, magic tee, ferrite devices, isolator, circulators

Module II (12 hours)

Generation of microwaves by tubes, limitations of conventional tubes, klystron amplifiers - analysis, reflex klystron oscillator-analysis, magnetrons, traveling wave tube (TWT), backward wave oscillator (BWO)-basic principles. Millimetre wave tubes-introduction

Module III (13 hours)

High frequency limitations of transistors, microwave transistors, varactors, Manley Rowe relations, parameteric amplifiers and frequency multipliers, tunnel diodes, Gunn effect, Gunn Diode oscillators, Avalanche effect, IMPATT & TRAPATT diodes, PIN diodes and their applications, Schottky barrier and backward diodes.

Module IV (14 hours)

Planar transmission lines such as stripline, microstrip line, slotline etc. VSWR measurement, microwave power measurement, impedance measurement, frequency measurement. Microwave filters, Analysis of infinite periodic structures, Terminated periodic structures, k-β Diagrams and Wave velocities, Filter design by the image parameter method, Constant K filter sections, m-derived filter sections and Composite filters.

Text Books

1. Liao S.Y.,||Microwave devices and Circuits||, Prentice Hall Of India, New Delhi, 3rd Ed. 2006

Reference Books

1. Rizzi P.A.,Microwave Engineering,Passive Circuits Hall of India
2. Pozar D.M .,|| Microwave Engineering, John Wiley
3. Annapurna Das and Sisir Das, Microwave Engineering, Tata-McGraw Hill ,New Delhi, 2008

Internal Continuous Assessment *(Maximum Marks-50)*

60% - Tests (minimum 2)

30% - Assignments (minimum 2) such as home work, problem solving, group discussions, quiz, literature survey, seminar, term-project, software exercises, etc.

10% - Regularity in the class

NEHRU COLLEGE OF ENGINEERING & RESEARCH CENTRE
THIRUVILWAMALA
THRISSUR DT.

PRINCIPAL
Nehru College of
Engineering and Research Centre
Pampady, Thiruvilwamala, Thrissur Dt
Pin 680 597 Kerala

University Examination Pattern

PART A: Analytical/problem solving SHORT questions — *8x 5 marks=40 marks*

Candidates have to answer EIGHT questions out of TEN. There shall be minimum of TWO and maximum of THREE questions from each module with total TEN questions.

PART B: Analytical/ DESCRIPTIVE questions — *4 x 15 marks=60 marks*

Two questions from each module with choice to answer one question.

Maximum Total Marks: 100

NEHRU COLLEGE OF ENGINEERING & RESEARCH CENTRE
PANJAL (P.O)
THIRUVILWAMALA
THRISSUR DT

PRINCIPAL
Nehru College of
Engineering and Research Centre
Panjal (P.O), Thiruvilwamala, Thrissur Dt
Pin - 680 597, Kerala

EC14 703: DIGITAL SYSTEM DESIGN

Teaching scheme **Credits:** 4
3 hours lecture and 1 hour tutorial per week

Objectives

- *After learning this subject students must be able to simulate and implement typical digital circuits*

Module I (12 hours)
Introduction to VHDL - Behavioral, Data flow and structural description -Identifiers, Data objects, Data types, Delay models -Transport vs Inertial Delay - Simulation Deltas - Sequential Processing - Process Statement - Signal Assignment vs Variable Assignment - Assert and report statements - Subprograms and functions- Packages - Predefined Attributes - Configurations- Subprogram Overloading - VHDL synthesis - Design Examples

Module II (14 hours)
Finite State machines: Design of finite state machines -state tables -state graphs - General models for sequential networks - Derivations of State Graphs and Tables Reduction of state Tables State Assignment - Sequential Network Design- Design examples using the FSM approach - sequence detector, multiplier Impediments to Synchronous design: Clock Skew, Gating the clock, Asynchronous inputs Synchronizer Failure and Metastability Timinghazards : Static Hazards, Dynamic Hazards, Designing hazard free circuit.

Module III (13 hours)
Designing with Programmable devices: Programmable Logic Arrays- Programmable Array Logic- sequential- combinational PLDs (Eg: PAL14L4 &PAL12H6), Sequential PLDs (Eg: PAL16R4)- Simple PLDs (Eg: 22V10)- Complex Programmable Logic Devices (Eg: XC9500)- Field Programmable Gate Arrays (Eg: XC 4000 & FLEX 10K)

Module IV (13 hours)
Introduction to Testing and Diagnosis Digital System Testing: Fault models - fault equivalence - fault location- fault dominance - single and multiple stuck faults - Testing for single stuck faults - Algorithms - random test generation - Testing for bridging faults Design for Testability: Design for Testability: Ad-hoc design for testability techniques - Classical scan designs - Boundary scan standards - Built-in-self-test - Test pattern generation - BIST architecture examples

NEHRU COLLEGE OF ENGINEERING & RESEARCH CENTRE
THIRUVILWAMALA
THRISSUR DT

PRINCIPAL
Nehru College of
Engineering and Research Centre
Pambady, Thiruvilwamala, Thrissur Dt
Pin 680 597 Kerala

Text Books

1 J. Bhasker, A VHDL Primer, Pearson Education, 2000
2 Charles H Roth, Jr , Lizy Kurien John, Digital Design using VHDL , Cengage Publishers, India Second Edition
3 Kenneth L Short, VHDL for Engineers , Pearson Education ,2009
4 John F Wakerly, Digital Design Principles and Practices, Pearson Education, Fourth Edition

Reference Books

1. Stephen Brown & Zvonko Vranesic, Fundamentals of Digital Logic with VHDL design, Tata McGraw Hill
2. Douglas L Perry, VHDL:Programming by example, Mc Graw Hill, Fourth Edition
3. Reiner W. Hartenstein, Andres Keevallik ,Field-Programmable Logic and Applications. From FPGAs to Computing Paradigm, Springer
4. Kevin Skahill, VHDL for Programmable Logic, Pearson Education
5. Stephen Brown,Zvonnko Vranesic,Fundamentals of digital logic design with VHDL, Mc Graw Hill,2006

Internal Continuous Assessment *(Maximum Marks-50)*

60% - Tests (minimum 2)
30% - Assignments (minimum 2) such as home work, problem solving, group discussions, quiz, literature survey, seminar, term-project, software exercises, etc.
10% - Regularity in the class

University Examination Pattern

PART A: Analytical/problem solving SHORT questions *8x 5 marks=40 marks*

Candidates have to answer EIGHT questions out of TEN. There shall be minimum of TWO and maximum of THREE questions from each module with total TEN questions.

PART B: Analytical/Problem solving DESCRIPTIVE questions 4 x 15 marks=60 marks

Two questions from each module with choice to answer one question.

Maximum Total Marks: 100

PRINCIPAL
Nehru College of
Engineering and Research Centre
Pampady, Thiruvilwamala, Thrissur Dt
Pin - 680 597, Kerala

EC14 704(A) INTERNET TECHNOLOGY

Teaching scheme **Credits:** 4

3 hours lecture and 1 hour tutorial per week

Objectives

- *To make the student aware of the various protocols used in internet.*

Module I (13 hours)

Computer networks and the internet-principles of application-layer protocols-HTTP- FTP-e-mail DNS-socket programming with TCP/UDP-web servers-web pages design using HTML and XML

Module II (13 hours)

Multimedia networking–applications – streaming stored audio and video-internet telephony-RTP-scheduling and policing mechanisms-integrated services- RSVP-differentiated services-network management-the internet network management framework

Module III (13 hours)

Network security –E-mail security-privacy-S/MIME-IP security-overview-architecture-authentication-header and payload-combining security associations-key management- web security-SSL and transport layer security – SET-systems security-intruders and viruses-firewalls-design-trusted systems.

Module IV (13 hours)

Mobile internet-mobile network layer-mobile IP-dynamic host configuration protocol-ad hoc networks-mobile transport layer-implications of TCP on mobility-indirect TCP-snooping TCP-Mobile TCP-transmission –selective retransmission –transaction –oriented TCP support for mobility-file system-WAP protocols –WML –WML script- wireless telephony applications

Text Books

1. Kurose J.F.& Ross K.W.,Computer Networking: A Top-Down Approach Featuring the Internet,Addison Wesley,Modules I&II
2. Stallings W.,Cryptography and Network Security Principles and practice.,Pearson Education Asia,ModuleIII
3. Schiller J.,Mobile Communications,Addison Wesley,Module IV

Reference Books

1. Deitel H.M.,Deitel P.J.& Nieto T.R.,Internet And World Wide Web: How to Program, Pearson Education
2. Greenlaw R& Hepp E,In-line/On-line;Fundamentals Of the Internet And the World Wide Web, Tata Mc Graw Hill
3. Sharma V & Sharma R,Developing e-Commerce Sites: An Integrated Approach ,Addison Wesley
4. Singhal et. Al S.,The Wireless Application Protocol, Pearson Education Asia
5. Goncalves M.,Firewalls : A Complete Guide, Tata Mc Graw Hill

NEHRU COLLEGE OF ENGINEERING & RESEARCH CENTRE
PRINCIPAL
Nehru College of Engineering and Research Centre
Pambady

Internal Continuous Assessment *(Maximum Marks-50)*

60% - Tests (minimum 2)

30% - Assignments (minimum 2) such as home work, problem solving, group discussions, quiz, literature survey, seminar, term-project, software exercises, etc.

10% - Regularity in the class

University Examination Pattern

PART A: Analytical/problem solving SHORT questions — *8x 5 marks=40 marks*

Candidates have to answer EIGHT questions out of TEN. There shall be minimum of TWO and maximum of THREE questions from each module with total TEN questions.

PART B: Analytical/ DESCRIPTIVE questions — *4 x 15 marks=60 marks*

Two questions from each module with choice to answer one question.

Maximum Total Marks: 100

NEHRU COLLEGE OF ENGINEERING AND RESEARCH CENTRE
PAMPADY THIRUVILWAMALA THRISSUR DT.

PRINCIPAL
Nehru College of
Engineering and Research Centre
Pampady, Thiruvilwamala, Thrissur Dt
Kerala

EC14 704(B) TELEVISION AND RADAR ENGINEERING

Teaching scheme **Credits:** 4
3 hours lecture and 1 hour tutorial per week

Objective

- *To give the basic ideas & operating principles of different types of b/w as well as color CTV and radar (both transmitter and receiver) and their uses.*
- *To create the awareness about the different standards of TV systems used in different countries and their basic principles.*

Module I (13 hours)

Principles of TV- image continuity- Horizontal and vertical scanning- number of scanning lines- flicker- interlaced scanning fine structure – Composite video signal- VSB transmission and reception- Channel bandwidth - positive and negative modulation- Transmitter – receiver – monochrome picture tube- CCD camera

Module II (13 hours)

Colour TV- compatibility- Three colour theory- Grassmans laws- -luminance, hue and saturation - Colour TV Camera tube- Picture tube- Pincushion correction techniques- auto degaussing circuits- frequency interleaving- Bandwidth for color signal transmission- modulation of colour difference signals- colour burst- weighting factors- -principles of NTSC,PAL and SECAM coder and decoder- Block Diagram of Digital T.V-Transmitter- receiver- HDTV, Concept of Plasma Screen

Module III (13 hours)

Radar system- Simple form of radar equation- Radar block diagram- radar frequencies- Prediction of range performance- minimum detectable signal- receiver noise- pulse reception- frequency and range ambiguities- antenna parameter – Doppler effect- system losses and propagation effects.

Module IV (13 hours)

CW Radar – Simple CW radar- Intermediate frequency CW radar- FM- CW radar- FM- CW altimeter- Multiple frequency CW radar- Pulse doppler MTI radars- Delay line canceller- blind speed- tracking radar- A scope and PPI display

Text Books

1. Gulati R.R., Modern Television Engineering ,Wiley Eastern Ltd.
2. Michael Robin& Michael Poulin, Digital Television Fundamentals, Mc Graw Hill
3. Bernard Grob& Charles E. Herndon,Basic Television and Video Systems,
4. Skolnik Introduction to Radar Systems,Mc Graw Hill,Kogakusha Ltd.

Reference Books

1. Dhake A.M.,Television Engineering,Tata Mc Graw Hill
2. Damacher P. Digital Broadcasting ,IEE Telecommunication Series

Internal Continuous Assessment *(Maximum Marks-50)*

60% - Tests (minimum 2)
30% - Assignments (minimum 2) such as home work, problem solving, group discussions, quiz, literature survey, seminar, term-project, software exercises, etc.
10% - Regularity in the class

PRINCIPAL
Nehru College of
Engineering and Research Centre
Pampady, Thiruvilwamala, Thrissur Dt
Pin - 680 597, Kerala

University Examination Pattern

PART A: Analytical/problem solving SHORT questions — *8x 5 marks=40 marks*

Candidates have to answer EIGHT questions out of TEN. There shall be minimum of TWO and maximum of THREE questions from each module with total TEN questions.

PART B: DESCRIPTIVE questions — *4 x 15 marks=60 marks*

Two questions from each module with choice to answer one question.

Maximum Total Marks: 100

PRINCIPAL
Nehru College of
Engineering and Research Centre
Pampady, Thiruvilwamala, Thrissur Dt
Pin - 680 597, Kerala

EC14 704(C) EMBEDDED SYSTEMS

Teaching scheme **Credits:** 4
3 hours lecture and 1 hour tutorial per week

Objective

- *To give ideas about embedded systems and system development*
- *To impart knowledge about real time operating systems and microcontrollers*

Pre-requisite: EC14 505 Microprocessors and Microcontrollers

Module I (13hours)
Introduction to Embedded Systems: Characteristics of Embedded systems, Categories of Embedded System- Requirements of Embedded Systems, Challenges and Issues in Embedded Software Development, Role of processor selection in Embedded System (Microprocessor V/s Micro-controller), Software embedded into a system-General ideas of Processor and Memory organization - Processor and memory selection– Interfacing to Memory and I/O devices- Devices and Buses- Device Drivers and Interrupt Servicing mechanisms- Applications of Embedded Systems in Consumer Electronics, Control System, Biomedical Systems, Handheld computers, Communication devices.

Module II (13 hours)
Real time operating systems: Task and Task States, tasks and data, Message queues-Timer Function-Events-Memory Management, Interrupt Routines in an RTOS environment, basic design Using RTOS. OS services. I/O subsystems. Network operating system. Real time embedded system OS.OS security- Real-Time Embedded Software Development

Module III (13hours)
Microcontroller: PIC microcontroller- architecture- Internal registers and timer/Clock initialization, Interrupts - programming. Introduction to AVR8515 microcontroller.16 and 32 bit microcontrollers. 8096/80196 family. ARM processor- architecture – applications - Motorola 68HC11/ 68HC12 family of microcontrollers. Internal architecture. Addressing modes and instruction set. Interrupts.

Module IV (13 hours)
Embedded system development: Interfacing of external Memory. Interfacing Analog and digital blocks, interfacing of different peripheral devices such as LED, LCD, Graphical LCD, Switches, Relay, stepper motors, ADC, DAC and various sensors. Introduction to-assembler, compiler, cross compilers and Integrated Development Environment (IDE).

NEHRU COLLEGE OF ENGINEERING & RESEARCH CENTRE THIRUVILWAMALA THRISSUR

PRINCIPAL
Nehru College of
Engineering and Research Centre
Pampady, Thiruvilwamala, Thrissur Dt
Pin - 680 597, Kerala

Text Books

1. Rajkamal —Embedded Systems Architecture; Programming and Designll; Tata McGraw Hill Publications.,New Delhi, 3rd Wd.2008
2. Sreve Heath,'Embedded system design', Elsevier, 2nd Ed. New Delhi, 2003
3. Steve Farber ,ARM System –on-chip , ,Second Edition,2000 Pearson Education
4. K.J. Ayala ,The 8051 Microcontroller , Penram International
5. J B Peatman, Design with PIC Microcontrollers, Prentice Hall
6. Dhananjay Gadre ,Programming and Customizing the AVR Microcontroller,MGH
7. S.Furbur, ARM system Architecture, Addition wesley, 1996.

Reference Books

1. Raj Kamal, Microcontrollers Architecture, programming, Interfacing and System Design, Pearson Education.
2. Dr K.V.K.K..Prasad ,Embedded /Real-Time systems :Concepts ,Design &Programming., DreamTech Publishers.,2004
3. Jonathan.W.Valvano, Embedded Microcomputer Systems, Real Time Interfacing, Publishedby Thomson Brooks/Col, 2002.
4. G.H. Miller, Microcomputer Engineering, 3d edition, Pearson Education.
5. Louis L. Odette ,'Intelligent Embedded Systems' , Addison-Wesley, 1991
6. Microchip Manual for PIC 18F 452

Internal Continuous Assessment *(Maximum Marks-50)*

60% - Tests (minimum 2)
30% - Assignments (minimum 2) such as home work, problem solving, group discussions, quiz, literature survey, seminar, term-project, software exercises, etc.
10% - Regularity in the class

University Examination Pattern

PART A: Analytical/problem solving SHORT questions — *8x 5 marks=40 marks*

Candidates have to answer EIGHT questions out of TEN. There shall be minimum of TWO and maximum of THREE questions from each module with total TEN questions.

PART B: Analytical/ DESCRIPTIVE questions — *4 x 15 marks=60 marks*

Two questions from each module with choice to answer one question.

Maximum Total Marks: 100

NEHRU COLLEGE OF ENGINEERING & RESEARCH CENTRE
THIRUVILWAMALA, THRISSUR DT.

PRINCIPAL
Nehru College of
Engineering and Research Centre
Pampady, Thiruvilwamala, Thrissur Dt
Pin - 680 597, Kerala

EC14 704(D): NANOTECHNOLGY

Teaching scheme **Credits:** 4
3 hours lecture and 1 hour tutorial per week

Objectives

- *To provide basic knowledge about nano/microdevices, mathematical modeling of electromechanical systems and applications*

Module I (11hours)
Biological analogies of Nano and Micro-electromechanical systems (NMEMS)-Fabrication of MEMS- assembling and packing –applications of NMEMS

Module II (15 hours)
Mathematical models and design of NMEMS- NMEMS architecture-electro magnetics and its applications is NMEMS –Molecular and Nano structure dynamics-molecular wires and molecular circuits-thermo analysis and heat equation.

Module III (14 hours)
Carbon nanotubes and nono devices-structural design of nano and MEM actuators and sensors-configurations and structural design of motion nano and micro-structures.

Module IV (12 hours)
Algebra of sets-direct current micro machines-mathematical models of induction motors-micro synchronous machines-single phase reluctance motors-stepper motors-synchronous reference frames-control of NMEMS

Text Books
1 Lyschevski,Sergey Edward,Nano and Microelectromechanical Systems: Fundamentals of Nano and micro engineering,CRC Press,2000

Internal Continuous Assessment *(Maximum Marks-50)*

60% - Tests (minimum 2)
30% - Assignments (minimum 2) such as home work, problem solving, group discussions, quiz, literature survey, seminar, term-project, software exercises, etc.
10% - Regularity in the class

University Examination Pattern

PART A: Analytical/problem solving SHORT questions *8x 5 marks=40 marks*

Candidates have to answer EIGHT questions out of TEN. There shall be minimum of TWO and maximum of THREE questions from each module with total TEN questions.

PART B: Analytical/ DESCRIPTIVE questions *4 x 15 marks=60 marks*

Two questions from each module with choice to answer one question.

Maximum Total Marks: 100

PRINCIPAL
Nehru College of
Engineering and Research Centre
Pampady, Thiruvilwamala, Thrissur Dist
Pin - 680 588, Kerala

EC14 704(E) IMAGE AND VIDEO PROCESSING

Teaching scheme **Credits:** 4
3 hours lecture and 1 hour tutorial per week

Objectives

- *To give ideas & techniques of image & video processing*
- *To impart knowledge about image filtering, restoration & reconstruction*

Pre-requisite: EC14 604 Digital Signal Processing

Module I (11hours)

Introduction: 2D systems, Mathematical preliminaries – Fourier Transform, Z Transform, Optical & Modulation transfer function, Matrix theory, Random signals, Discrete Random fields, Spectral density function. Image Perception: Light, Luminance, Brightness, Contrast, MTF of the visual system, Visibility function, Monochrome vision models, Fidelity criteria, Color representation, Chromaticity diagram, Color coordinate systems, Color difference measures, Color vision model, Temporal properties of vision.

Module II (15 hours)

Image Sampling and Quantization: Introduction, 2D sampling theory, Limitations in sampling & reconstruction, Quantization, Optimal quantizer, Compander, Visual quantization. Image Transforms: Introduction, 2D orthogonal & unitary transforms, Properties of unitary transforms, DFT, DCT, DST, Hadamard, Haar, Slant, KLT, SVD transform. Image Representation by Stochastic Models: Introduction, one-dimensional Causal models, AR models, Non-causal representations, linear prediction in two dimensions.Image Enhancement: Point operations, Histogram modeling, spatial operations, Transform operations, Multi-spectral image enhancement, false color and Pseudo-color, Color Image enhancement.

Module III (14 hours)

Image Filtering & Restoration: Image observation models, Inverse & Wiener filtering, Fourier Domain filters, Smoothing splines and interpolation, Least squares filters, generalized inverse, SVD and Iterative methods, Maximum entropy restoration, Bayesian methods, Coordinate transformation & geometric correction, Blind de-convolution.
Image Analysis & Computer Vision: Spatial feature extraction, Transform features, Edge detection, Boundary Extraction, Boundary representation, Region representation, Moment representation, Structure, Shape features, Texture, Scene matching & detection, Image segmentation, Classification Techniques.
Image Reconstruction from Projections: Introduction, Radon Transform, Back projection operator, Projection theorem, Inverse Radon transform, Fourier reconstruction, Fan beam reconstruction, 3D tomography. Image Data Compression: Introduction, Pixel coding, Predictive techniques, Transform coding, Inter-frame coding, coding of two tone images, Image compression standards.

Module IV (12 hours)

Video Processing: Fundamental Concepts in Video – Types of video signals, Analog video, Digital video, Color models in video, Video Compression Techniques – Motion compensation, Search for motion vectors, H.261, H.263, MPEG I, MPEG 2, MPEG 4, MPEG 7 and beyond, Content based video indexing

NEHRU COLLEGE OF ENGINEERING & RESEARCH CENTRE
THIRUVILWAMALA
THRISSUR DIST.

PRINCIPAL
Nehru College of
Engineering and Research Centre
Pampady, Thiruvilwamala, Thrissur Dt
Pin - 680 597, Kerala

Text Books

1 K. Jain, —Fundamentals of Digital Image Processing||, Pearson Education (Asia) Pte. Ltd./Prentice Hall of India, 2004.
2 . Z. Li and M.S. Drew, —Fundamentals of Multimedia||, Pearson Education (Asia) Pte. Ltd., 2004.
3. R. C. Gonzalez and R. E. Woods, —Digital Image Processing||, 2nd edition, Pearson Education (Asia) Pte. Ltd/Prentice Hall of India,2004.
4. M. Tekalp, —Digital Video Processing||, Prentice Hall, USA, 1995.

Internal Continuous Assessment *(Maximum Marks-50)*

60% - Tests (minimum 2)
30% - Assignments (minimum 2) such as home work, problem solving, group discussions, quiz, literature survey, seminar, term-project, software exercises, etc.
10% - Regularity in the class

University Examination Pattern

PART A: Analytical/problem solving SHORT questions *8x 5 marks=40 marks*

Candidates have to answer EIGHT questions out of TEN. There shall be minimum of TWO and maximum of THREE questions from each module with total TEN questions.

PART B: Analytical/ DESCRIPTIVE questions *4 x 15 marks=60 marks*

Two questions from each module with choice to answer one question.

Maximum Total Marks: 100

PRINCIPAL
Nehru College of
Engineering and Research Centre
Pampady, Thiruvilwamala, Thrissur Dt
Pin 680 597 Kerala

NEHRU COLLEGE OF ENGINEERING & RESEARCH CENTRE
THIRUVILWAMALA
THRISSUR DT

EC14 705(A) SOFT COMPUTING

Teaching scheme **Credits:** 4
3 hours lecture and 1 hour tutorial per week

Objectives

- *To acquaint the students with the important soft computing methodologies- neural networks, fuzzy logic, genetic algorithms and genetic programming*

Module I (12 Hours)

Artificial Intelligent systems – Neural Networks, Fuzzy Logic and Evolutionary Programming concepts. Artificial Neural Networks – Biological neural networks – Model of an artificial neuron- Comparison between biological neuron and artificial neuron– Basic models of artificial neural network –Learning methods – Activation function and terminologies of ANN- Mc Culloch Pitts Neuron – Linear Separability – Hebb network – Perceptron Networks , Adaline, Madaline.

MODULE II (14 Hours)

Back propagation Networks : Architecture - Multi layer perceptron –Back propagation learning – Input layer, Hidden Layer , Output Layer computations, Calculation of error, Training of ANN, Back propagation Algorithm, Momentum and Learning rate, Selection of various parameters in BP networks- Radial Basis Function Networks [T. B. 1].

Variations in standard BP algorithms – Decremental iteration procedure, Adaptive BP, GA based BP, Quick prop training, Augmented BP networks, Sequential learning Approach for single hidden layer Neural networks.

Module III (13 Hours)

Fuzzy sets and crisp sets-Fuzzy sets –Fuzzy set operations-Fuzzy relations- Membership functions – Features of the membership functions-Fuzzification- Methods of membership value assignments- Defuzzification- Defuzzification methods-Fuzzy Rule Base and approximate reasoning- Truth values and tables in fuzzy logic, Fuzzy propositions, Formation of rules, Decomposition of rules, Aggregation of fuzzy rules- Fuzzy Inference Systems- Construction and Working Principle of FIS- Methods of FIS- Mamdani FIS and Sugeno FIS- Fuzzy Logic Control Systems- Architecture and Operation of FLC System- FLC System Models- Application of FLC Systems.

Module IV (13 Hours)

Genetic Algorithms- Basic Concepts- Creation of off- springs- Working Principle- Encoding- Fitness function- Reproduction- Roulette- Wheel Selection, Boltzmann Selection- Tournament selection- Rank Selection- Steady- State Selection- Elitism- Generation gap and steady state replacement- Inheritance operators- Cross Over- Inversion and deletion- Mutation Operator- Bit- wise operators- Generational Cycle- Convergence of Genetic Algorithm- Differences and Similarities between GA and other traditional methods- Applications.

Text Books

1. S. N. Sivanandam, S. N. Deepa, *Principles of Soft Computing,* Wiley India Pvt. Ltd.[Module I& III]
2. R.Rajasekharan and G.A. Vijayalakshmi Pai, *Neural Networks, Fuzzy Logic and Genetic Algorithms- Synthesis and Applications,* Prentice Hall of India. [Module II & IV]

PRINCIPAL
Nehru College of
Engineering and Research Centre

Reference Books

1. Fakhreddine O.Karray & Clarence De Silva, *Intelligent Systems Design, Theory, Tools and Application*, Pearson Education
2. S. Haykins, *Neural Networks – A Comprehensive Foundation* , Prentice Hall 2002.
3. L. Fausett, *Fundamentals of Neural Networks*, Prentice Hall 1994.
4. T.Ross, *Fuzzy Logic with Engineering Applications*, TMH
5. D.E. Goldberg, *Genetic Algorithms in search, Optimization and Machine Learning*, Addison Wesley MA, 1989.
6. John Yen, Reza Lengari, *Fuzzy Logic- Intelligence, Control and Information*, Pearson Education

Internal Continuous Assessment *(Maximum Marks-50)*

60% - Tests (minimum 2)
30% - Assignments (minimum 2) such as home work, problem solving, group discussions, quiz, literature survey, seminar, term-project, software exercises, etc.
10% - Regularity in the class

University Examination Pattern

PART A: Analytical/problem solving SHORT questions — *8x 5 marks=40 marks*

Candidates have to answer EIGHT questions out of TEN. There shall be minimum of TWO and maximum of THREE questions from each module with total TEN questions.

PART B: Analytical/ DESCRIPTIVE questions — *4 x 15 marks=60 marks*

Two questions from each module with choice to answer one question.

Maximum Total Marks: 100

NEHRU COLLEGE OF ENGINEERING & RESEARCH CENTRE
PRINCIPAL
Nehru College of
Engineering and Research Centre
Pambady, Thiruvilwamala, Thrissur Dt
Pin - 680 597, Kerala

EC14 705(B) HIGH SPEED DIGITAL DESIGN

Teaching scheme **Credits:** 4
3 hours lecture and 1 hour tutorial per week

Objectives

- *To give the basic ideas involved in high speed digital design*
- *To understand the transmission line effects and cross talk and the effects of terminations & vias*

Module I (13 hours)
Introduction to high-speed digital design - frequency, time and distance - capacitance and inductance effects - high speed properties of logic gates - speed and power - measurement techniques - rise time and bandwidth of oscilloscope probes - self inductance, signal pickup and loading effects of probes - observing crosstalk

Module II (13hours)
Transmission line effects and crosstalk - transmission lines - point to point wiring - infinite uniform transmission lines - effects of source and load impedance - special transmission line cases - line impedance and propagation delay - ground planes and layer stacking - crosstalk in solid ground planes, slotted ground planes and cross-hatched ground planes - near and far end crosstalk

Module III (13 hours)
Terminations and vias - terminations - end, source and middle terminations - AC biasing for end terminations - resistor selection - crosstalk in terminators - properties of vias - mechanical properties of vias - capacitance of vias - inductance of vias - return current and its relation to vias

Module IV (13 hours)
Stable reference voltage and clock distribution - stable voltage reference - distribution of uniform voltage - choosing a bypass capacitor - clock distribution - clock skew and methods to reduce skew - controlling crosstalk on clock lines - delay adjustments - clock oscillators and clock jitter

Text Books

1. Howard Johnson & Martin Graham, -High Speed Digital Design: A Handbook of Black Magic‖, Prentice Hall PTR
2. Dally W.S. & Poulton J.W., -Digital Systems Engineering‖, Cambridge University Press
3. Masakazu Shoji, -High Speed Digital Circuits‖, Addison Wesley Publishing Company

Internal Continuous Assessment *(Maximum Marks-50)*

60% - Tests (minimum 2)
30% - Assignments (minimum 2) such as home work, problem solving, group discussions, quiz, literature survey, seminar, term-project, software exercises, etc.
10% - Regularity in the class

NEHRU COLLEGE OF ENGINEERING & RESEARCH CENTRE THIRUVILWAMALA THRISSUR
PRINCIPAL
Nehru College of
Engineering and Research Centre
Pampady

University Examination Pattern

PART A: Analytical/problem solving SHORT questions — *8x 5 marks=40 marks*

Candidates have to answer EIGHT questions out of TEN. There shall be minimum of TWO and maximum of THREE questions from each module with total TEN questions.

PART B: Analytical/ DESCRIPTIVE questions — *4 x 15 marks=60 marks*

Two questions from each module with choice to answer one question.

Maximum Total Marks: 100

PRINCIPAL
Nehru College of
Engineering and Research Centre
Pampady, Thiruvilwamala, Thrissur
Pin [illegible] Kerala

EC14 705(C) ANTENNA THEORY AND DESIGN

Teaching scheme **Credits:** 4
3 hours lecture and 1 hour tutorial per week

Objectives

- *To impart the concepts of different types of antennas and antenna arrays-analysis & synthesis*
- *To develop understanding about design and modeling of antenna using computational methods*

Pre-requisites: EC14 601 Radiation & Propagation

Module I (13 hours)

Antenna Fundamentals: Radiation mechanism – over view, Electromagnetic Fundamentals, Solution of Maxwell's Equations for Radiation Problems, Ideal Dipole, Radiation Patterns, Directivity and Gain, Antenna Impedance, Radiation Efficiency. Antenna Polarization
Arrays: Array factor for linear arrays, uniformly excited, equally spaced Linear arrays, pattern multiplication, directivity of linear arrays, nonuniformly excited -equally spaced linear arrays, Mutual coupling, multidimensional arrays, phased arrays, feeding techniques, perspective on arrays.

Module II (13 hours)

Types of Antennas: Traveling - wave antennas, Helical antennas, Biconical antennas, sleave antennas, and Principles of frequency independent Antennas, spiral antennas, and Log - Periodic Antennas. Aperture Antennas- Techniques for evaluating Gain, reflector antennas - Parabolic reflector antenna principles, Axi -symmetric parabolic reflector antenna, offset parabolic reflectors, dual reflector antennas, Gain calculations for reflector antennas, feed antennas for reflectors, field representations, matching the feed to the reflector, general feed model, feed antennas used in practice.
Microstrip Antennas-Introduction, rectangular patch, circular patch, bandwidth, coupling, circular polarization, arrays and feed network

Module III (13 hours)

Antenna Synthesis: Formulation of the synthesis problem, synthesis principles, line sources shaped beam synthesis, linear array shaped beam synthesis — Fourier Series, Woodward — Lawson sampling method, comparison of shaped beam synthesis methods, low side lobe narrow main beam synthesis methods- Dolph Chebyshev linear array, Taylor line source method.

Module IV (13 hours)

CEM for Antennas : Introduction to computational electromagnetics, Introduction to method of moments-Pocklington's integral equation, source modeling, weighted residuals. Introduction to Finite Difference Time Domain Method-Finite difference and Yee's algorithm, cell size, numerical stability and dispersion. Absorbing boundary conditions. Introduction to geometrical optics

NEHRU COLLEGE OF ENGINEERING & RESEARCH CENTRE
THIRUVILWAMALA
THRISSUR DT.

PRINCIPAL
Nehru College of
Engineering and Research Centre
Pampady, Thiruvilwamala, Thrissur Dt
Pin 680 597 Kerala

Text Books

1. Warren L Stutzman and Gary A Thiele, -Antenna Theory and Designl. 2ndEd, John - Wiley and Sons Inc. 1998
2. Constantine. A. Balanis: -Antenna Theory- Analysis and Designll, Wiley India, 2nd Edition, 2008
3. Kraus, -Antennasl, Tata McGraw Hill, NewDelhi, 3ll Edition, 2003

Reference Books

2. R.E.Collin, Antennas and Microwave propagation, Tata Mc-Graw Hill,2004
3. R.C.Johnson and H.Jasik,Antenna Engineering hand book, Mc-Graw Hill,1984
4. I.J.Bhal and P.Bhartia,Micro-strip antennas,Artech house,1980

Internal Continuous Assessment *(Maximum Marks-50)*

60% - Tests (minimum 2)
30% - Assignments (minimum 2) such as home work, problem solving, group discussions, quiz, literature survey, seminar, term-project, software exercises, etc.
10% - Regularity in the class

University Examination Pattern

PART A: Analytical/problem solving SHORT questions *8x 5 marks=40 marks*

Candidates have to answer EIGHT questions out of TEN. There shall be minimum of TWO and maximum of THREE questions from each module with total TEN questions.

PART B: Analytical/Problem solving DESCRIPTIVE questions 4 x 15 marks=60 marks

Two questions from each module with choice to answer one question.

Maximum Total Marks: 100

NEHRU COLLEGE OF ENGINEERING AND RESEARCH CENTRE THIRUVILWAMALA THRISSUR-DT

PRINCIPAL
Nehru College of
Engineering and Research Centre
Pampady, Thiruvilwamala, Thrissur Dt
Pin 680 597 Kerala

EC14 705(E) BIO MEDICAL INSTRUMENTATION

Teaching scheme **Credits:** 4

3 hours lecture and 1 hour tutorial per week

Objectives

- To impart knowledge about the principle and working of different types of bio-medical electronic equipments/devices

Module I (13 hours)

Electrical activity of excitable cells-SD curve-functional organization of the peripheral nervous system-electrocardiogram (in detail with all lead systems)-electroencephalogram-electromyogram – electroneurogram- electrode –electrolyte interface-polarisation-polarisable and non polarisable electrodes- surface electrodes –needle electrodes-micro electrodes- practical hints for using electrodes-_skin- electrodes' equivalent circuit-characteristics of _bio-amplifiers'

Module II (13 hours)

Blood pressure-direct measurements-harmonic analysis of blood pressure waveform-system for measuring venous pressure-heart sounds- phonocardiography-cardiac catheterization-indirect blood pressure measurement –electromagnetic blood flow meters-ultrasonic blood flow meters-impedance plethysmography –photo plethysmography-_indicator- dilution'method for blood flow determination –spirometry-measurement of various respiratory parameters- respiratory plethysmography-chamber plethysmography

Module III (13 hours)

Measurement of gas flow rate cardiac pacemakers and other electric stimulators-defbrillators and cardio converters –blood plumps –hemodialysis-ventilators –infant incubators-drug delivery devices-lithotripsy-therapeutic applications of laser

Module IV (13 hours)

Physiological effects of electricity-important susceptibility parameters-macro shock hazards-micro shock hazards-protection against shock-electrical isolation- electrical safety analyzers-measurements of pH,pC2, and PO2

Text Books

1. Webster J,' Medical Instrumentation-Application and Design', John Wiley
2. Handbook of Biomedical Instrumentation, Tata-Mc graw Hill, New Delhi

Reference Books

1. Geddes& Baker,'Principles of Applied Biomedical Instrumentation', Wiley
2. Encyclopedia of Medical Devices and Instumentation Wiley
3. Bronzino,Hand book of Biomedical Engineering, IEEE press book

Internal Continuous Assessment *(Maximum Marks-50)*

60% - Tests (minimum 2)
30% - Assignments (minimum 2) such as home work, problem solving, group discussions, quiz, literature survey, seminar, term-project, software exercises, etc.
10% - Regularity in the class

PRINCIPAL
Nehru College of
Engineering and Research Centre
Pampady, Thiruvilwamala, Thrissur Dt
Pin - 680 597, Kerala

University Examination Pattern

PART A: DESCRIPTIVE solving SHORT questions — *8x 5 marks=40 marks*

Candidates have to answer EIGHT questions out of TEN. There shall be minimum of TWO and maximum of THREE questions from each module with total TEN questions.

PART B: Analytical/ DESCRIPTIVE questions — *4 x 15 marks=60 marks*

Two questions from each module with choice to answer one question.

Maximum Total Marks: 100

NEHRU COLLEGE OF ENGINEERING & RESEARCH CENTRE THIRUVILWAMALA, THRISSUR

PRINCIPAL
Nehru College of
Engineering and Research Centre
Pampady, Thiruvilwamala, Thrissur Dt
Pin - 680 597, Kerala

Semester End Examination *(Maximum Marks-100)*

NEHRU COLLEGE OF ENGINEERING & RESEARCH CENTRE
THIRUVILWAMALA, THRISSUR DT.

PRINCIPAL
Nehru College of
Engineering and Research Centre
Pampady, Thiruvilwamala, Thrissur Dt
Pin - 680 597, Kerala

EC14 801 DATA AND COMMUNICATION NETWORKS

Teaching scheme **Credits:** 4
4 hours lecture and 1 hour tutorial per week

Objectives

- *To give the basic ideas of data communication networks-queuing theory, architecture and protocol*
- *To understand the concept of switching networks*

Module I (10hours)
Queueing Theory: Markov chain-discrete time and continuous time Markov chains- Poisson Process M/M/1 Queue Little's formula M/M/m/m queueing models.
Layered Architectures in Data networks: OSI standards architecture and protocols.

Module II (14hours)
Data link layer-ARQ retransmission strategies Flow control and congestion control in network layer-error control, stop and wait, Sliding windows, Automatic Repeat (ARQ)Asynchronous Protocols, -X MODEM, Y MODEM, Synchronous protocols – Character Oriented and Bit oriented protocols (HDLC). Routing functions and routing algorithm shortest path routing virtual circuit and datagram networks.TCP/IP protocols

Module III (14 hours)
Local Area Networks IEEE 802 standards CSMA/CD, Random access Aloha-pure and slotted aloha Random access using CSMA/CD. Ethernet, Token Bus, Token ring, FDDI ,ATM Networks, , Routing in ATM networks, Distributed Queue Dual Bus, SONET, SDH- X .25 Protocols,

Module IV (14 hours)
Circuit switching: Elements of Traffic Engg. GoS and Blocking Probability. Incoming traffic and service time characterization. Analysis of blocking models and delay models- Erlang formulae.Digital switching networks, Two stage -Three stage and N- stage switches, combination Switches Blocking probability analysis of multistage switches-Lee's approximation.

NEHRU COLLEGE OF ENGINEERING & RESEARCH CENTRE
PAMPADY
THIRUVILWAMALA,
THRISSUR DT.

PRINCIPAL
Nehru College of
Engineering and Research Centre
Pampady-Thiruvilwamala, Thrissur Dt
Pin - 680 597 Kerala

Text Books

1. JeanWalrand & Pravin Varaiya,‖High Performance Communication Networks‖ Morgan Kaufman Publishers
2. Behrus A. Forouzan etal. -Data Communication and Networking‖, 4th Edition, Tata McGraw-Hill, 2000.
3. Bertsekas D.& Gallager R.,‖Data Networks‖ Prentice Hall ofIndia
4. William Stallings, -Data and Computer Communication‖, Fifth Edition, Prentice Hall of India, 1997.
5. Andrew S.Tanenbaum, -Computer networks‖. Third Edition. prentice Hall of India, 1996.
6. Viswanathan T.,Telecommunication Switching Systems and Networks,Prentice Hall of India Pvt Ltd.
7. Schwartz M., Telecommunication Networks-Protocols,Modeling and Analysis,Addison Wesley Publishing Company

References

1. Flood J E., Telecommunication Switching Traffic and Networks,Pearson Education Pvt Ltd.
2. Freeman R L ., Telecommunication System Engineering ,Wiley Inter Science Publications
3. Das J.,Review of Digital Communication ,New Age Internal (p) Ltd.,Publishers

Internal Continuous Assessment *(Maximum Marks-50)*

60% - Tests (minimum 2)
30% - Assignments (minimum 2) such as home work, problem solving, group discussions, quiz, literature survey, seminar, term-project, software exercises, etc.
10% - Regularity in the class

University Examination Pattern

PART A: Analytical/problem solving SHORT questions — *8x 5 marks=40 marks*

Candidates have to answer EIGHT questions out of TEN. There shall be minimum of TWO and maximum of THREE questions from each module with total TEN questions.

PART B: Analytical/ DESCRIPTIVE questions — *4 x 15 marks=60 marks*

Two questions from each module with choice to answer one question.

Maximum Total Marks: 100

NEHRU COLLEGE OF ENGINEERING & RESEARCH CENTRE
PAMPADY
THIRUVILWAMALA
THRISSUR

PRINCIPAL
Nehru College of
Engineering and Research Centre
Pampady, Thiruvilwamala, Thrissur Dt

EC14 803 WIRELESS MOBILE COMMUNICATION

Teaching scheme **Credits:** 4
3 hours lecture and 1 hour tutorial per week ·

Objective

- *To provide a strong background in the basics of wireless mobile communication*
- *To impart knowledge about the existing GSM and CDMA mobile communication technology*

Module I (13Hrs)

Cellular concept -frequency reuse- co channel interference-adjacent channel interference- power control for reducing interference-improving capacity in cellular systems-cell splitting-sectoring- hand off strategies-channel assignment strategies- Trunking and Erlang capacity calculations.

Module II (13Hrs)

Mobile radio propagation- free space propagation model- ground reflection model- large scale path loss- small scale fading and multipath propagation-impulse response model of a multi- path channel- parameters of a mobile multipath channel- multi path delay spread-doppler spread-coherence bandwidth- coherence time- time dispersion and frequency selective fading-frequency dispersion and time selective fading.

Module III (13Hrs)

Fundamental concepts of spread spectrum systems-performance of direct sequence spread spectrum systems- analysis of DSSS- processing gain and anti jamming margin-frequency hopped spread spectrum systems. Multi user detection in CDMA. RAKE receiver concepts, Diversity , combining methods - space time processing.

Module IV (13Hrs)

Standards of wireless communication systems- GSM, IMT -2000, UMTS, Wideband CDMA, Wi-Fi, Wi-Max. GSM architectures, objectives, servicing frequency bands-GSM sub sys- tems, Radio link features in GSM. Introduction to multi carrier communication: OFDM, MC CDMA.

Text Books:

1. Rappaport T.S, Wireless Communication Principles and practices, Pearson Education Asia, New Delhi, 3rd Ed. 2003.
2. Andrea Goldsmith, Wireless Communications, Cambridge University press
3. Vijay k Garg, Joseph E Wilkes, Principles and Applications of GSM, Pearson Education
4. A.J Viterbi, CDMA- Principles of Spread Spectrum, Addison Wesley.

Reference books:

1. Kamilo Feher, Wireless Digital Communication, PHI.
2. A F Molisch, Wireless communications, Wiley India, 2008.

NEHRU COLLEGE OF ENGINEERING & RESEARCH CENTRE
THIRUVILWAMALA, THRISSUR DT.
PRINCIPAL
Nehru College of
Engineering and Research Centre
Pambady, Thiruvilwamala, Thrissur Dt
Pin 68 Kerala

Internal Continuous Assessment *(Maximum Marks-50)*

60% - Tests (minimum 2)
30% - Assignments (minimum 2) such as home work, problem solving, group discussions, quiz, literature survey, seminar, term-project, software exercises, etc.
10% - Regularity in the class

University Examination Pattern

PART A: Analytical/problem solving SHORT questions — *8x 5 marks=40 marks*

Candidates have to answer EIGHT questions out of TEN. There shall be minimum of TWO and maximum of THREE questions from each module with total TEN questions.

PART B: Analytical/ DESCRIPTIVE questions — *4 x 15 marks=60 marks*

Two questions from each module with choice to answer one question.

Maximum Total Marks: 100

PRINCIPAL
Nehru College of
Engineering and Research Centre
Pampady, Thiruvilwamala, Thrissur Dt
Pin 680 597 Kerala

NEHRU COLLEGE OF ENGINEERING & RESEARCH CENTRE
PAMPADY
THIRUVILWAMALA
THRISSUR DT

EC14 804(D) MOBILE COMPUTING

Teaching scheme **Credits:** 4
3 hours lecture and 1 hour tutorial per week

Objectives

- *To give basic concepts of mobile computing*
- *To impart knowledge about various wireless systems , LANs and Mobile IP*

Module I (13 hours)
Personal Communications Services Architecture, Mobility management-handoff management-network signalling- -GSM- GPRS-DECT-UMTS/ WCDMA-IMT 2000- IS 95-cdma2000satellite networks-basics-parameters and configurations-mobile number portability-FAMA-DAMA-broadcast systems-DAB-DVB

Module II (13 hours)
WLANs (Wireless LANs)- Wi-Fi-IEEE 802.11- architecture-services- IEEE 802.11a & 802.11b standard-HIPERLAN-, Bluetooth -IEEE 802. 15-WiMAX-IEEE 802.16

Module III (13 hours)
Wireless Networking: MAC protocols, Routing, Transport, Ad-hoc networking.
Mobile IP-dynamic host configuration protocol-Routing-DSDV-DSR-Alternative metrics

Module IV (13 hours)
Wireless Application Protocol (WAP): The Mobile Internet standard-architecture-cpomponents of WAP standard WAP Gateway and Protocols-WAP2.0- wireless mark up Languages (WML)-basics

Text Books

1. Jochen Schiller,'Mobile Communications', PHI/Pearson Education, 2nd Ed., 2003
2. William stallings,'Wireless communications & Networks', 2ndEd, Pearson education,New Delhi, 2005
3. Lin., _Wireless & Mobile Architectures', Wiley India, New Delhi, 2009

Reference Books

1. Mosa Ali Abu-Rgheff,'Introduction to CDMA wireless communications', Academin Press-Elsevier, 2007
2. A F Molisch, _Wireless communications',Wiley India, 2005
3. Ivan Stojmenovic,'Handbook of Wirelss Networks and Mobile Computing', Wiley India, New Delhi, 2002
4. Steele,'GSM, CDMAOne & 3G systems Wiley India,New Delhi, 2008
5. kaveh Pahlavan, prasanth Krishnamoorthi.'Principles of wireless networks', PHI/Pearson Education, 2003
6. Uwe Hansmann, lother Merk, Martin S Nicklons and Thomas Srober,||Principles of mobile computing', Springer, Newyork, 2003
7. Hazysztof Wesolowshi,'Mobile Communication Systems',John Wiley& Sons Ltd. 2002

PRINCIPAL
Nehru College of
Engineering and Research Centre
Thiruvilwamala, Thrissur Dt
Pin 680 59? Kerala

Internal Continuous Assessment *(Maximum Marks-50)*

60% - Tests (minimum 2)

30% - Assignments (minimum 2) such as home work, problem solving, group discussions, quiz, literature survey, seminar, term-project, software exercises, etc.

10% - Regularity in the class

University Examination Pattern

PART A: Analytical/problem solving SHORT questions — *8x 5 marks=40 marks*

Candidates have to answer EIGHT questions out of TEN. There shall be minimum of TWO and maximum of THREE questions from each module with total TEN questions.

PART B: Analytical/ DESCRIPTIVE questions — *4 x 15 marks=60 marks*

Two questions from each module with choice to answer one question.

Maximum Total Marks: 100

NEHRU COLLEGE OF ENGINEERING & RESEARCH CENTRE
THIRUVILWAMALA
THRISSUR DT.

PRINCIPAL
Nehru College of
Engineering and Research Centre
Pampady, Thiruvilwamala, Thrissur Dt
Pin - 680 597, Kerala

EC14 805(E) ADVANCED DIGITAL SIGNAL PROCESSING

Teaching scheme **Credits:** 4
3 hours lecture and 1 hour tutorial per week

Objectives

- *To give ideas of multirate systems and filter banks*
- *To impart knowledge about wavelet transforms & their applications*

Pre-requisite: EC14 604 Digital Signal Processing

Module I (14hours)
Multirate system fundamentals: Basic multirate operations, up-sampling and down sampling: Time domain and frequency domain analysis, Identities of multirate operations, Interpolator and decimator design, Rate conversion, Polyphase representation.

Module II (14 hours)
Multirate Filter banks: Maximally decimated filter banks, Quadrature mirror filter (QMF) banks, Polyphase representation, Errors in the QMF banks: Aliasing and Imaging Method of cancelling aliasing error, Amplitude and phase distortion, Prefect reconstruction (PR) QMF banks, PR condition, M-channel perfect reconstruction filter banks, Paraunitary PR Filter Banks

Module III (14 hours)
Wavelets: Fundamentals of signal decomposition - brief overview of Fourier transform and short time Fourier transform - time frequency resolution - Continuous wavelet transform - different wavelets- DWT - wavelet decomposition - approximation of vectors in nested linear vector spaces - example of MRA - orthogonal wavelet
decomposition based on the Haar wavelet - digital filter implementation of the Haar wavelet decomposition

Module IV (11 hours)
Wavelet applications: Image compression - EZW algorithm - Audio compression - signal denoising techniques- different types- edge detection. Lossless compression

Text Books

1. P. P. Vaidyanathan, Multirate Systems and Filter Banks, Pearson Education, Delhi, 2004
2. K. P. Soman and K. I. Ramachandran, Insight into Wavelets, Prentice Hall of India, New Delhi, 2004
3. G. Strang and T. Nguyen, Wavelets and Filter Banks, Wellesley-Cambridge Press, MA, 1996
4. Li Tan,'DSP-Fundamentals & Applications', Elsevier, New Delhi, 2008

Reference Books

1. M. Vetterli and J. Kovacevic, Wavelets and Subband Coding, Prentice-Hall,Englewood Cliffs, N. J., 1995
2. S. K. Mitra, Digital Signal Processing: A Computer Based Approach, 2nd ed., Tata Mc-Graw Hill, New Delhi, 2001
3. C. S. Burrus, R. A. Gopinath, and H. Guo, Introduction to Wavelets and Wavelet Transforms: A Primer, Prentice Hall, Englewood Cliffs, N. J., 1997

PRINCIPAL
Nehru College of
Engineering and Research Centre

Internal Continuous Assessment *(Maximum Marks-50)*

60% - Tests (minimum 2)
30% - Assignments (minimum 2) such as home work, problem solving, group discussions, quiz, literature survey, seminar, term-project, software exercises, etc.
10% - Regularity in the class

University Examination Pattern

PART A: Analytical/problem solving SHORT questions *8x 5 marks=40 marks*

Candidates have to answer EIGHT questions out of TEN. There shall be minimum of TWO and maximum of THREE questions from each module with total TEN questions.

PART B: Analytical/Problem solving DESCRIPTIVE questions 4 x 15 marks=60 marks

Two questions from each module with choice to answer one question.

Maximum Total Marks: 100

NEHRU COLLEGE OF ENGINEERING & RESEARCH CENTRE
PAMPADY, THIRUVILWAMALA, THRISSUR DT.

PRINCIPAL
Nehru College of
Engineering and Research Centre
Pampady, Thiruvilwamala, Thrissur Dt
Pin 680 597 Kerala

NEHRU COLLEGE OF ENGINEERING & RESEARCH CENTRE
PAMPADY
THIRUVILWAMALA
THRISSUR DT.

PRINCIPAL
Nehru College of
Engineering and Research Centre
Pampady, Thiruvilwamala, Thrissur Dt
Pin - 680 597, Kerala

08 EC 6321CMOS VLSI DESIGN

Credits: 4-0-0: 4

Pre-requisites: Nil **Year: 2015**

Course Objectives:

- To design and develop the CMOS circuits and system with subsystems
- To interpret and analyze the basic characteristics of CMOS

Syllabus

MOS device design equations, DCcharacteristics, CMOS logic structures, design strategies, verification and testing, Data path operation, multiplication, and memory elements control FSM

Course Outcome:

Upon completion of the course, student will be able to design and develop simple circuits for a processor with CMOS Technology

TEXT BOOKS:

1. Neil. H.E. Weste and K. Eshragian, "Principles of CMOS VLSI Design". 2nd Edition. Addison-Wesley , 2000.
2. Douglas a. Pucknell and K. Eshragian., "Basic VLSI Design" 3rd Edition. PHI, 2000.
3. R. Jacob Baker, Harry W. LI., & David K. Boyce., "CMOS Circuit Design", 3rd Indian reprint, PHI, 2000.

REFERENCE BOOKS:

1. Semiconductor Devices Modelling and Technology Nandita Das Guptha , Amitava Das Guptha; Prentice Hall India
2. Operation and Modeling of The MOS transistor : YannisTsividis 2/e Oxford Uni- versity Press
3. Kang &Leblebigi "CMOS Digital IC Circuit Analysis & Design"- McGraw Hill, 2003
4. Weste and Eshraghian, "Principles of CMOS VLSI design" Addison-Wesley, 2002

NEHRU COLLEGE OF ENGINEERING & RESEARCH CENTRE
PAMPADY
THIRUVILWAMALA
THRISSUR DT.

PRINCIPAL
Nehru College of
Engineering and Research Centre
Pampady, Thiruvilwamala, Thrissur Dt
Pin - 680 597, Kerala

MODULE : 1 MOS Transistors, MOS Transistor Switches, CMOS Logic, Circuit and System Representations, MOS Transistor Theory - Introduction MOS Device Design Equations,	8	15
MODULE : 2 The Complementary CMOS Inverter-DC Characteristics, Static Load MOS Inverters, The Differential Inverter, The Transmission Gate, The Tri State Inverter, Bipolar Devices, Resistance Estimation Capacitance Estimation, Inductance, Switching Characteristics CMOS-Gate Transistor Sizing, Power Dissipation, Sizing Routing Conductors, Charge Sharing, Design Margining, Reliability.	8	15
FIRST INTERNAL TEST		
MODULE : 3 CMOS Logic Gate Design, Basic Physical Design of Simple Gate, CMOS Logic Structures, Clocking Strategies, I/O Structures, Low Power Design	8	15
MODULE : 4 Design Strategies CMOS Chip Design Options, Design Methods, Design Capture Tools, Design Verification Tools, Design Economics, Data Sheets,	8	15
SECOND INTERNAL TEST		
MODULE : 5 CMOS Testing -Manufacturing Test Principles, Design Strategies for Test, Chip Level Test Techniques, System Level Test Techniques, Layout Design for Improved Testability.	10	20
MODULE : 6 Data Path Operations-Addition/Subtraction, Parity Generators, Comparators, Zero/One Detectors, Binary Counters, ALUs, Multiplication, Shifters, Memory Elements, Control-FSM, Control Logic Implementation.	10	20

NEHRU COLLEGE OF ENGINEERING & RESEARCH CENTRE
PALAKKAD OF THIRUVILWAMALA THRISSUR DT.

PRINCIPAL
Nehru College of
Engineering and Research Centre
Pampady, Thiruvilwamala, Thrissur Dt
Pin 680 597 Kerala

Course Objectives:

- A foundation in fundamental of sequential circuits
- Practice in designing sequential circuits-mealy ,moore and FM charts
- An introduction to VHDL basing

Syllabus

Design of multiple output sequential circuits, introduction to PLDS, state diagram, state table minimization of mealy and moor machine, Race conditions and cycles, Hazards, FM charts, Different modeling in VHDL, Model simulation, Synthesis –Issues, Timing simulation

Course Outcome:

After completion of this course students are able to design-sequential circuits, multiple output combination circuits & SM charts..Also to write VHDL programs & simulate

Text Books: One or two text books only (if required)

1. "Fundamentals of Digital Design", Charles H.Roth, Jr., PWS Pub.Co., 1998.

2. "Digital Design Fundamentals", Kenneth J Breeding, Prentice Hall, Englewood Cliffs, New Jersey.1989.

References:

1. Kevin Skahill, "VHDL for Prgrammable Logic", Addison -Wesley, 1996

2. Z. Navabi, "VHDL Analysis and Modeling of Digital Systems", McGRAW-Hill, 1998

NEHRU COLLEGE OF ENGINEERING & RESEARCH CENTRE THIRUVILWAMALA THRISSUR DT.

PRINCIPAL
Nehru College of
Engineering and Research Centre
Thiruvilwamala, Thrissur Dt
Kerala

COURSE PLAN

08 EC 6331Advanced Digital System Design (L-T-P : 3-0-0) CREDITS:3		
MODULES	**Contact hours**	**Sem.Exam Marks;%**
MODULE : 1 Introduction - Design of Combinational Systems – Multiple output combination circuit design – McCluskey method- Introduction to PLDs - PROM based design - PAL - Arithmetic PAL devices – Study based on PAL22V10, CPLDs (MAX3000A CPLD).	6	15
MODULE:2 Mealy Machine, Moore Machine, State diagrams, State table minimization, Incompletely specified sequential machine	6	15
FIRST INTERNAL TEST		
MODULE : 3 Asynchronous sequential circuit design (fundamental mode), Derivation of excitation table, Designing with SM charts – State machine charts, Derivation of SM charts, and Realization of SM charts.	6	15
MODULE : 4 Hazards, Race conditions and cycles, Static and dynamic hazards, Methods for avoiding races and hazards, essential hazards	6	15
SECOND INTERNAL TEST		
MODULE : 5 Introduction to HDL – Behavioral modeling - Data flow modeling- Structural modeling- Basic language elements – Entity-Architecture- Configurations - Subprograms and operator overloading- Packages and libraries	7	20
MODULE : 6 VHDL advanced features - Model simulation - Hardware modeling examples. Synthesis. Timing Simulation. VHDL Synthesis Issues.	8	20

NEHRU COLLEGE OF ENGINEERING & RESEARCH CENTRE THIRUVILWAMALA THRISSUR

PRINCIPAL
Nehru College of
Engineering and Research Centre
Pampady, Thiruvilwamala, Thrissur Dt
Pin - 680 597, Kerala

COURSE PLAN

08 EC 6341VLSI Fabrication Technology (L-T-P : 3-0-0) CREDITS:3		
MODULES	**Contact hours**	**Sem.Exam Marks;%**
MODULE : 1 Introduction, Electronic-Grade Silicon, Czochralski Crystal Growing, Silicon Shaping, Process Considerations**Epitaxy:** Introduction, Vapour-Phase Epitaxy, Molecular Beam Epitaxy, Silicon on Insulators, Epitaxial Evaluation.	6	15
MODULE : 2 Introduction, Optical Lithography, Electron Lithography, X-ray Lithography, Ion Lithography. Optical contrast,contrastcurve,MTF	6	15
FIRST INTERNAL TEST		
MODULE : 3 Reactive Plasma Etching: Introduction, Plasma Properties, Feature-Size Control and Anisotropic Etch Mechanisms, Other Properties of Etch Processes, Reactive Plasma-Etching Techniques and Equipment, Specific Etch Processes,P-well,N-well,twin-well process	6	15
MODULE : 4 Ion Implantation:Introduction, Range Theory, Implantation Equipment, Annealing, Shallow Junctions, High-Energy Implantation, isolation methods-PN junction, Trench isolation,ohmic contacts	6	15
SECOND INTERNAL TEST		
MODULE : 5 Metallization: Introduction, Metallization Applications, Metallization Choices, Physical Vapor Deposition, Patterning, Metallization Problems, New Role of Metallization, Testing of VLSI circuits	7	20
MODULE : 6 VLSI Process Integration: Introduction, Fundamental Considerations for IC Processing, , CMOS IC Technology,, Bipolar IC Technology, IC Fabrication, Stick diagram,rules for stick diagram, design rules Packaging of VLSI Devices: Introduction, Package Types, Packaging Design Considerations	8	20

PRINCIPAL
Nehru College of
Engineering and Research Centre
Pampady, Thiruvilwamala, Thrissur Dt
Pin 680 597, Kerala

08 EC 6351(A): ELECTRONIC SYSTEM DESIGN

Credits: 3-0-0: 3

Pre-requisites: Nil **Year: 2015**

Course Objectives:

- To make students to practical circuits design issues and techniques
- To make students aware of various filtering systems, electrostatic discharges etc

Syllabus:

Practical analog and mixed signal circuit design issues and techniques, practical logic circuit design and issues, Electromagnetic compatibility, Balancing & Filtering in Electronic Systems, Protection against Electrostatic Discharges (ESD), Packaging & Enclosures of Electronic System, Cooling in/of Electronic System

Course Outcome:

Students who successfully complete this course will be able to Practical analog and mixed signal circuit design issues and techniques, practical logic circuit design and issues

TEXT BOOKS:

1. Electronic Instrument Design, 1st edition; by: Kim R. Fowler; Oxford University Press.
2. Noise Reduction Techniques in Electronic Systems, 2nd edition; by: Henry W. Ott John Wiley & Sons.
3. Digital Design Principles & Practices, 3rd edition by: John F. Wakerly; Prentice Hall International, Inc.
4. Operational Amplifiers and linear integrated circuits, 3rd edition by: Robert F. Coughlin; Prentice Hall International, Inc
5. Intuitive Analog circuit design by: Mark. T Thompson; Published by Elsevier

REFERENCE BOOKS:

1. Printed Circuit Boards - Design & Technology, 1st edition; by: W Bosshart; Tata McGraw Hill.
2. ADesigner'sGuidetoInstrumentationAmplifiers;by:CharlesKitchinandLewCounts; Seminar Materials @ http://www.analog.com
3. Errors and Error Budget Analysis in Instrumentation Amplifier Applications; by: Eamon Nash; Application note AN-539@ http://www.analog.com

NEHRU COLLEGE OF ENGINEERING & RESEARCH CENTRE

PRINCIPAL
Nehru College of
Engineering and Research Centre
Pampady, Thiruvilwamala, Thrissur Dt
Pin 680 597 Kerala

COURSE PLAN

08 EC 6351(A) : ELECTRONIC SYSTEM DESIGN(L-T-P : 3-0-0) CREDITS:3		
MODULES	**Contact hours**	**Sem.Exam Marks;%**
MODULE : 1 Passive components: Understanding and interpreting data sheets and specifications of various passive and active components, non-ideal behavior of passive components,. Op amps: DC performance of op amps: Bias, offset and drift. AC Performance of operational amplifiers: band width, slew rate and noise. Properties of a high quality instrumentation amplifier	6	15
MODULE : 2 Design issues affecting dc accuracy & error budget analysis in instrumentation amplifier applications. Isolation amplifier basics. Active filers: design of low pass, high pass and band pass filters. ADCs and DACs: Characteristics, interfacing to microcontrollers. Selecting an ADC. Power supplies: Characteristics, design of full wave bridge regulated power supply. Circuit layout and grounding in mixed signal system.	6	15
FIRST INTERNAL TEST		
MODULE : 3 **Practical Logic Circuit Design Issues and Techniques:** Understanding and interpreting data sheets & specifications of various CMOS&BiCMOS family Logic devices. Electrical behavior (steady state & dynamic) of CMOS &BiCMOS family logic devices. Benefits and issues on migration of 5-volt and 3.3 volt logic to lower voltage supplies. CMOS/TTL Interfacing Basic design considerations for live insertion. JTAG/IEEE 1149.1 design considerations	6	15
MODULE : 4 Design for testability, Estimating digital system reliability. Digital circuit layout and grounding. PCB design guidelines for reduced EMI. Designing for (EMC), EMC regulations, typical noise path, methods of noise coupling, methods of reducing interference in electronic systems. Cabling of Electronic Systems: Capacitive coupling, effect of shield on capacitive coupling, inductive coupling, effect of shield on inductive coupling, effect of shield on magnetic coupling, magnetic coupling between shield and inner conductor, shielding to prevent magnetic radiation, shielding a receptor against magnetic fields. coaxial cable versus shielded twisted pair, ribbon cables	6	15
SECOND INTERNAL TEST		

PRINCIPAL
Nehru College of
Engineering and Research Centre
Pampady, Thiruvilwamala, Thrissur Dt
Pin - 680 597 Kerala

MODULE : 5 Grounding of Electronic Systems: Safety grounds, signal grounds, single-point ground systems, multipoint-point ground systems, hybrid grounds, functional ground layout, practical low frequency grounding, hardware grounds, grounding of cable shields, ground loops, shield grounding at high frequencies. Balancing & Filtering in Electronic Systems: Balancing, power line filtering, power supply decoupling, decoupling filters, high frequency filtering, and system bandwidth.	7	20
MODULE : 6 Protection Against Electrostatic Discharges (ESD):Static generation, human body model, static discharge, ESD protection in equipment design, software and ESD protection, ESD versus EMC.Packaging& Enclosures of Electronic System: Effect of environmental factors on electronic system (environmental specifications), nature of environment and safety measures. Packaging's influence and its factors. Cooling in/of Electronic System: Heat transfer, approach to thermal management, mechanisms for cooling, operating range, basic thermal calculations, cooling choices, heat sink selection.	8	20

PRINCIPAL
Nehru College of
Engineering and Research Centre
Pampady, Thiruvilwamala, Thrissur Dt
Pin 680 597 Kerala

08 EC 6351(B): DIGITAL INTEGRATED CIRCUIT DESIGN

Credits: 3-0-0: 3

Pre-requisites: Nil **Year: 2015**

Course Objectives:

- To make students to idea about digital integrated circuits
- To make students aware of CMOS logics, arithmetic circuits using CMOS

Syllabus:

CMOS inverters, Static CMOS design combinational and sequential circuits, Arithmetic circuits in CMOS VLSI, Bipolar gate design

Course Outcome:

Students who successfully complete this course will be able to idea about Basic CMOS circuits in VLSI, and to design integrated circuits using CMOS logic

TEXT BOOKS:

1. Sung-Mo Kang & Yusuf Leblebici, CMOS Digital Integrated Circuits - Analysis & Design, MGH, Second Ed., 1999
2. Jan M Rabaey, Digital Integrated Circuits - A Design Perspective, Prentice Hall, 1997
3. Ken Martin, Digital Integrated Circuit Design, Oxford University Press, 2000
4. R. J. Baker, H. W. Li, and D. E. Boyce, CMOS circuit design, layout and simulation. New York: IEEE Press, 1998.
5. Analysis and Design of Digital Integrated Circuits, Third Edition, David A. Hodges, Horace G. Jackson, and Resve A. Saleh, McGraw-Hill, 2004.

NEHRU COLLEGE OF ENGINEERING & RESEARCH CENTRE
THIRUVILWAMALA, THRISSUR DT.

PRINCIPAL
Nehru College of
Engineering and Research Centre
Thiruvilwamala, Thrissur Dt

COURSE PLAN

08 EC 6351(B) DIGITAL INTEGRATED CIRCUIT DESIGN (L-T-P : 3-0-0) CREDITS:3		
MODULES	**Contact hours**	**Sem.Exam Marks;%**
MODULE : 1 CMOS inverters -static and dynamic characteristics, CMOS NAND, NOR and XOR Gates. Calculation or delay times of CMOS Inverter	6	15
MODULE : 2 Static CMOS design combinational and sequential circuits -Method of Logical Effort for transistor sizing -power consumption in CMOS gates- Low power CMOS design	6	15
FIRST INTERNAL TEST		
MODULE : 3 CMOS transmission gates-Simple circuit using TG-basic principle of pass transistor logic-Voltage bootstrapping-CMOS ring oscillator	6	15
MODULE : 4 Bipolar gate Design- BiCMOS logic - static and dynamic behaviour -Delay and power consumption in BiCMOS Logic.	6	15
SECOND INTERNAL TEST		
MODULE : 5 Arithmetic circuits in CMOS VLSI - Adders- multipliers- shifter -CMOS memory design - SRAM and DRAM	7	20
MODULE : 6 Dynamic CMOS logic-Precharge/ evaluable logic-cascading problem-domino logic-cascading domino logic gates-Charge sharing in domino logic-realisation of simple functions using domino logic-NORA logic-True single phase clock dynamic logic	8	20

NEHRU COLLEGE OF ENGINEERING & RESEARCH CENTRE
THIRUVILWAMALA
THRISSUR-DT.

PRINCIPAL
Nehru College of
Engineering and Research Centre
Pampady, Thiruvilwamala, Thrissur Dt
Pin - 680 597, Kerala

08 EC 6351(C): DESIGNING WITH MICROCONTROLLERS

Credits: 3-0-0: 3

Pre-requisites: Nil **Year: 2015**

Course Objectives:

- To make students know about 8051 microcontrollers.
- To make students aware of various ARM processors

Syllabus:

18-Bit 8051 Microcontroller, 32- Bit ARM920T Processor Core Introduction, Programmers Model,Cache,memory management, ARM instruction set, ARM 9 microcontroller architecture

Course Outcome:

Students who successfully complete this course will be able to know about 18 bit microcontrollers and different ARM processors

TEXT BOOKS:

1. Intel Hand Book on "Embedded Microcontrollers", 1ST Edition
2. Muhammad Ali Mazidi, Janice GillispieMazidi, Rolin D. McKinlay, "The 8051 Microcontroller and Embedded Systems using Assembly and C", 2ND Edition, Prentice Hall
3. ARM Company Ltd. "ARM Architecture Reference Manual– ARM DDI 0100E"
4. David Seal "ARM Architecture Reference Manual", 2001 Addison Wesley, England; Morgan Kaufmann Publishers

REFERENCE BOOKS:

1. Ayala,KennethJ"8051 Microcontroller-Architecture,Programming&Applications",1ST Edition, Penram International Publishing
2. Steve Furber, "ARM System-on-Chip Architecture", 2ND Edition, Pearson Education
3. Predko,Myke,"Programming and Customizing the 8051 Microcontroller", 1st Edition, McGraw Hill International

NEHRU COLLEGE OF ENGINEERING & RESEARCH CENTRE
THIRUVILWAMALA
THRISSUR DT

PRINCIPAL
Nehru College of
Engineering and Research Centre
Thirupattur, Thiruvilwamala, Thrissur Dt
Pin - 680 597, Kerala

COURSE PLAN

08 EC 6351(C): DESIGNING WITH MICROCONTROLLERS (L-T-P : 3-0-0) CREDITS:3		
MODULES	**Contact hours**	**Sem.Exam Marks;%**
MODULE 1: 18-Bit 8051 Microcontroller: Introduction to Embedded Systems.8-Bit Microcontrollers: A popular 8-bit Microcontroller (Intel 8051) is covered under this section Architecture: CPU Block diagram, Memory Organization, Program memory, Data Memory, Interrupts Peripherals: Timers, Serial Port, I/O Port Programming: Addressing Modes, Instruction Set, Programming Microcontroller based System Design: Timing Analysis, Case study with reference to 8-bit 8051 Microcontroller. A typical application design from requirement analysis through concept design, detailed hardware and software design using 8-bit 8051 Microcontrollers.	6	15
MODULE : 2 32- Bit ARM920T Processor Core Introduction:RISC/ARM Design Philosophy, About the ARM920T Core, Processor Functional Block Diagram Programmers Model: Data Types, Processor modes, Registers, General Purpose Registers, Program Status Register, CP15 Coprocessor, Memory and memory mapped I/O, Pipeline, Exceptions, Interrupts and Vector table, Architecture revisions, ARM Processor Families.Cache:Memory hierarchy and cache memory, Cache Architecture – Basic Architecture of a Cache, Basic operation of a cache controller, Cache and main memory relationship, Set Associativity Cache Policy – Write policy, Cache line replacement policies, allocation policy on a cache miss Instruction Cache, Data Cache, Write Buffer and Physical Address TAG RAM	6	15
FIRST INTERNAL TEST		
MODULE:3 Memory Management Units: How virtual memory works, Details of the ARM MMU, Page Tables, Translation Look-aside Buffer, Domains and Memory access permissions ARM Instruction Set: Data Processing instructions, Branch instructions, Load - Store instructions, Software Interrupt Instruction, Program Status Register Instruction, Loading Constants Thumb Instruction Set: Thumb register usage, ARM-Thumb interworking, Branch instruction, Data processing instructions, Load - store instructions, stack instructions, software interrupt instructions. Interrupt Handling: Interrupts, Assigning interrupts, Interrupt latency, IRQ & FIQ exceptions, Basic interrupt stack design and implementation, Non-nested Interrupt handle	6	15
MODULE : 4 ARM9 Microcontroller Architecture: A popular ARM9 Microcontroller from Atmel (AT91RM9200) is covered under this sectionAT91RM9200 Architecture: Block Diagram, Features, Memory Mapping Memory Controller (MC), Memory Controller Block Diagram, Address Decoder, External Memory Areas, Internal Memory Mapping	6	15
SECOND INTERNAL TEST		

NEHRU COLLEGE OF ENGINEERING & RESEARCH CENTRE THIRUVILWAMALA THRISSUR DT.

PRINCIPAL
Nehru College of
Engineering and Research Centre
Thiruvilwamala, Thrissur Dt

MODULE : 5 External Bus Interface (EBI), Organization of the External Bus Interface, EBI Connections to Memory Devices External Memory Interface, Write Access, Read Access, Wait State ManagementAT91RM9200PERIPHERALSInterrupt Controller: Normal Interrupt, Fast Interrupt, AIC System Timer (ST):Period Interval Timer (PIT), Watchdog Timer (WDT), Real time Timer (RTT)Real Time Clock (RTC), Parallel Input/output Controller (PIO)	7	20
MODULE : 6 AT91RM9200 PERIPHERALS: Universal Synchronous Asynchronous Receiver Transceiver (USART):Block Diagram, Functional Description, Synchronous and Asynchronous Modes Development& Debugging Tools for Microcontroller based Embedded Systems: Software and Hardware tools like Cross Assembler, Compiler, Debugger, Simulator, In-Circuit Emulator (ICE), Logic Analyzer etc. Brief Architecture of Power PC.	8	20

NEHRU COLLEGE OF ENGINEERING & RESEARCH CENTRE
PAMPADY THIRUVILWAMALA THRISSUR DT.

PRINCIPAL
Nehru College of
Engineering and Research Centre
Pampady Thiruvilwamala Thrissur
Pin 680 597 Kerala

Course Objectives

NEHRU COLLEGE OF ENGINEERING & RESEARCH CENTRE
PAMPADY
THIRUVILWAMALA
THRISSUR DT.

PRINCIPAL
Nehru College of
Engineering and Research Centre
Pampady, Thiruvilwamala, Thrissur Dt
Pin - 680 597, Kerala

SEMESTER 2

08 EC 6312 ANALOG VLSI DESIGN

Credits: 3-0-0: 3
Pre-requisites: Nil **Year: 2015**

Course Objectives:

- A foundation in the fundamentals of Analog VLSI Design;
- Ability to design of IC MOS Amplifiers and PLL
- An introduction to challenges facing in Analog IC Design;

Syllabus

Fundamental concepts and overview; Analog MOS Models ; Active and Passive device fabrication; Basics of single stage CMOS amplifiers; CMOS Differential Amplifiers; Design of single and two stage CMOS Op-amps ; High frequency Op-amps; Design of non-linear and wave shaping circuits ; Switched capacitor circuits; Design of DPLL and DLL; Basics of CMOS data converters.

Course Outcome:

Students who successfully complete this course will have demonstrated an ability to apply the fundamental concepts of Analog VLSI Design; ability to design IC MOS Amplifiers; ability to design DPLL which is used in various fields. Students will be familiarized with the challenges in Analog IC design.

Text Books: One or two text books only (if required)

1. "Analog Integrated Circuit Design", David. A. Johns and Ken Martin, John Wiley and Sons, 2001.

2. "Design of Analog CMOS Integrated Circuit", BehzadRazavi, Tata McGraw HILL, 2002.

3. "CMOS Analog Circuit Design", Philip Allen & Douglas Holberg, Oxford University Press, 2002.

References:

"AnalogVLSI – Signal Information andProcessing", Mohammed Ismail&Feiz, John Wiley and Sons.

NEHRU COLLEGE OF ENGINEERING & RESEARCH CENTRE
THIRUVILWAMALA
THRISSUR

PRINCIPAL
Nehru College of
Engineering and Research Centre
Pampady, Thiruvilwamala, Thrissur Dt
Pin 6-0 ... Kerala

COURSE PLAN

08 EC 6312 ANALOG VLSI DESIGN (L-T-P : 3-0-0)CREDITS:3		
MODULES	**Contact hours**	**Sem.Exam Marks;%**
MODULE : 1 Analog MOS transistor models Temperature effects and Noise in MOS transistor MOS resistors, characterization of resistive, capacitive elements and MOS devices	6	15
MODULE : 2 Passive and active CMOS current sink/ sources– basics of single stage CMOS amplifiers common Source, common gate and source follower stages frequency response.	6	15
FIRST INTERNAL TEST		
MODULE : 3 CMOS Differential Amplifiers: CMOS Operational Amplifiers one stage and two stage gain boosting Common mode feedback (CMFB) Cascode and Folded cascade Structures	6	15
MODULE : 4 High Performance Opamps – High speed/ high frequency opamps, micro power opamps, low noise opamps and low voltage opamps. Current mirrors, filter implementations	6	15
SECOND INTERNAL TEST		
MODULE : 5 Supply independent and temperature independent references Band gap references PTAT current generation and constant Gm biasing – CMOS comparators – Multipliers and wave shaping circuits – effects due to nonlinearity and mismatch in MOS circuits. Switched Capacitor Circuits: First and Second Order Switched Capacitor Circuits,	7	20
MODULE : 6 Switched Capacitor filters, CMOS oscillators, simple and charge pump CMOS PLLsnon ideal effects in PLLs, Delay locked loops and applications, basics of CMOS data converters – Medium and high speed CMOS data converters, Over samplingconverters.	8	20

PRINCIPAL
Nehru College of
Engineering and Research Centre
Pampady, Thiruvilwamala, Thrissur (Dt)
Pin - 680 597, Kerala

08 EC 6322 CAD OF VLSI CIRCUITS

Credits: 3-0-0: 3
Year: 2015

Pre-requisites: Nil

Course Objectives:

- This objective is to provide the idea about various CAD tools front end back end design

Syllabus

Fundamental concepts and overview; Various CAD Tools for front end and Back end design, Introduction to VLSI Methodologies, Introduction to Design Tools, Layout Algorithms Circuit partitioning, Dataflow modeling

Course Outcome:

Students who successfully complete this course will have demonstrated an ability to apply the fundamental concepts of CAD of VLSI circuits.

Text Books:

1. N.A. Sherwani, " Algorithms for VLSI Physical Design Automation ", 1999.
2. S.H. Gerez, " Algorithms for VLSI Design Automation ", 1998.4. J. Bhasker, "A VHDL Primer", Addison-Weseley Longman Singapore Pte Ltd. 1992
3. Drechsler, R., *Evolutionary Algorithms for VLSI CAD*, Kluwer Academic Publishers, Boston, 1998.
4. Verilog HDL by Samir Palnitkar

PRINCIPAL
Nehru College of
Engineering and Research Centre

COURSE PLAN

08 EC 6322 CAD of VLSI Circuits(L-T-P : 3-0-0) CREDITS:3		
MODULES	**Contact hours**	**Sem.Exam Marks;%**
MODULE : 1 Various CAD Tools for front end and Back end design, Schematic editors, Layout editors, Place and Route tools	6	15
MODULE : 2 Introduction to VLSI Methodologies - VLSI Physical Design Automation - Design and Fabrication of VLSI Devices - Fabriction process	6	15
FIRST INTERNAL TEST		
MODULE : 3 Introduction to Design Tools: Introduction & Familiarity with Design Tools from various vendors e.g. Synopsis, Mentor Tools etc. Verilog Basics - Modeling Levels - Data Types - Modules and Ports - Instances - Basic Language Concepts	6	15
MODULE : 4 Dataflow modelling – Behavioural modeling Modelling and Simulation of systems/subsystems using Verilog HDL. Typical case studies.	6	15
MODULE : 5 Layout Algorithms Circuit partitioning, placement, and routing algorithms; Design rule verification; Circuit Compaction; Circuit extraction and post-layout simulation	7	20
MODULE : 6 Automatic Test Program Generation; Combinational testing D-Algorithm and PODEM algorithm; Scan-based testing of sequential circuits; Testability measures for circuits.	8	20

NEHRU COLLEGE OF ENGINEERING & RESEARCH CENTRE
PALAKKAD
THIRUVILWAMALA
THRISSUR DIST.

PRINCIPAL
Nehru College of
Engineering and Research Centre

08 EC 6332 TESTING AND VERIFICATION OF VLSI CIRCUITS

Credits: 3-0-0: 3

Pre-requisites: Nil **Year: 2015**

Course Objectives:

- To study the issues in testing; understand the fundamentals of VLSI and system testing with fault models and simulation
- To explore the concept in boundary scan,BIST for logic and memories with simple intellectual property of core based design in SoC

Syllabus

Scope and issues in testing and verification of ic,s-introduction to test benches and verilog test bench code unity-various fault models-boundary scan-ATPG-BIST-simple IP's design for memory and core RISC CPU design

Course Outcome:

- Upon completion of the course with laboratory practice.
- Students will obtain the skill in writing test bench coding for combinational, sequential circuits
- Able to analyze and identify simple fault models to combinational and sequential circuits

Text Books:

1. M. Abramovici, M. A. Breuer, A. D. Friedman, "Digital Systems Testing and Testable Design" Piscataway, New Jersey: IEEE Press, 1994

2. M. Bushnell and V. D. Agarwal, "Essentials of Electronic Testing for Digital, Memory and Mixed-Signal VLSI Circuits", Kluwer Academic Publishers, 2000

3. T.Kropf, "Introduction to Formal Hardware Verification", Springer Verlag, 2000.

4. P. Rashinkar, Paterson and L. Singh, "System-on-a-Chip Verification-Methodology and Techniques", Kluwer Academic Publishers, 2001.

5. SamihaMourad and YervantZorian, "Principles of Testing Electronic Systems", Wiley (2000).

REFERENCES

1. "SoCVerification Methodology andTechniques", PrakashRashinkar Peter Patersonand Leena Singh .Kluwer Academic Publishers, 2001.

2. "Reuse Methodology manual for System On A Chip Designs", Michael Keating,

NEHRU COLLEGE OF ENGINEERING RESEARCH CENTRE PAMPADY THIRUVILWAMALA THRISSUR DT.

PRINCIPAL
Nehru College of
Engineering and Research Centre
Pampady, Thiruvilwamala, Thrissur Dt
Kerala

COURSE PLAN

08 EC 6332 TESTING AND VERIFICATION OF VLSI CIRCUITS (L-T-P : 3-0-0) CREDITS:3		
MODULES	**Contact hours**	**Sem.Exam Marks;%**
MODULE : 1 **Introduction**: Scope of testing and verification in VLSI design process; Issues in testand verification of complex chips, embedded cores and SOCs, Fault models	6	15
MODULE : 2 Test coding: Introduction to test benches, writing test benches in Verilog HDL.	6	15
FIRST INTERNAL TEST		
MODULE : 3 Fundamentals of VLSI testing, Automatic test pattern generation, Design for testability	6	15
MODULE : 4 Scan design: Test interface and boundary scan	6	15
MODULE : 5 System Testing and test for SOCs, Iddq testing, Delay fault testing, BIST for testing of logic and memories, Test automation.	7	20
MODULE : 6 Design Verification Techniques based on simulation, analytical and formal approaches, Functional verification, Timing verification, Formal verification, Basics of equivalence checking and model checking. Verification of simple IPs: Memory verification, FIFO verification and Verification of RISC CPU	8	20

NEHRU COLLEGE OF ENGINEERING & RESEARCH CENTRE
THIRUVILWAMALA
THRISSUR

PRINCIPAL
Nehru College of
Engineering and Research Centre
Pampady, Thiruvilwamala, Thrissur Dt
Pin - 680 597, Kerala

08 EC 6342(A)LOW POWER VLSI DESIGN

Credits: 3-0-0: 3
Pre-requisites: Nil **Year: 2015**

Course Objectives:

- skills to effectively apply analytical and simulation techniques for power analysis of CMOS VLSI
- Utilize probabilistic analysis

Syllabus

Probabilistic Power Analysis, Circuit –Transistor and Gate Sizing, Equivalent Pin Ordering, Advanced Techniques –Adiabatic Computation, Power Estimation - Synthesis for Low Power - Design and Test of Low Voltages - CMOS Circuits. Low Power Static RAM Architectures -Low Energy Computing

Course Outcome:

On successful completion of this subject, the student should be capable of

- Analyze the requirements of low power CMOS VLSI design
- Applying effective simulation techniques for power analysis
- Optimizing power at various levels of design abstraction
- Constructing low energy computing system

Text Books:

1. Gary Yeap" Practical Low Power Digital VLSI Design ", 1997.
2. Kaushik Roy, Sharat Prasad, " Low Power CMOS VLSI Circuit Design ", 20003.
   A.P.Chandrakasan and R.W. Broadersen, Low power digital CMOS design, Kluwer,1995

REFERENCE BOOKS:

1. CMOS Analog Circuit Design", Philip Allen & Douglas Holberg, Oxford University Press, 2002.
2. Rabaey, Pedram, "Low power design methodologies" Kluwer Academic, 1997

PRINCIPAL
Nehru College of
Engineering and Research Centre
Pambady, Thiruvilwamala, Thrissur Dt
Pin - 680 588, Kerala

COURSE PLAN

08 EC 6342(A)LOW POWER VLSI DESIGN (L-T-P : 3-0-0) CREDITS:3		
MODULES	**Contact hours**	**Sem.Exam Marks;%**
MODULE : 1 Introduction –Charging and Discharging of Capacitance, Short Circuit Current in CMOS Circuits, CMOS Leakage Current, Static Current, Basic Principles of Low Power Design, Low Power Figure of Merits. Simulation Power Analysis-SPICE Circuit Simulation, Gate Level Logic Simulation, Architecture Level Analysis, Data Correlation Analysis, Monte Carlo Simulation.	6	15
MODULE:2 : Probabilistic Power Analysis- Random Logic Signals, Static Probability, Transition Density, Techniques of Power Analysis, Gate Level Power Analysis, Power Estimation using Entropy-Combinational logic systems, Sequential logic systems.	6	15
FIRST INTERNAL TEST		
Circuit –Transistor and Gate Sizing, Equivalent Pin Ordering, network Restructuring and Reorganization, Special Latches and Flip Flops, Low Power Digital Cell Library, Logic –Gate Reorganization, Signal Gating, Logic Encoding, State Machine Encoding, Pre-computation Logic. Special Techniques –Power Reduction in Clock Networks, CMOS Floating Node, Low Power Bus, Low Power Techniques for SRAM, Architecture and Systems-Power and Performance Management, Switching Activity Reduction, Parallel Architecture with Voltage Reduction.	6	15
MODULE : 4 Advanced Techniques –Adiabatic Computation, Pass Transistor Logic Synthesis, Asynchronous Circuits, Reversible Logic Circuits, Elimination of Garbage outputs	6	15
SECOND INTERNAL TEST		
MODULE : 5 Physics of Power Dissipation in CMOS FET Devices- MIS Structure, Energy band representations, Threshold Voltage, Surface Space Charge Region, Threshold Voltage, Depletion Region Analysis- Depth of Depletion Region, Inversion Layer thickness, Charge in Inversion Layer, Long Channel MOSFET- Body Effect, Sub-threshold Current, Sub-threshold Swing.	7	20

PRINCIPAL
Nehru College of
Engineering and Research Centre
Pambady, Thiruvilwamala, Thrissur Dt
Pin 680 597 Kerala

MODULE : 6 Power Estimation - Synthesis for Low Power - Design and Test of Low Voltages - CMOS Circuits. Low Power Static RAM Architectures -Low Energy Computing UsingEnergy Recovery Techniques – Software Design for Low Power.	8	20

08 EC 6342(C)DESIGN OF DIGITAL SIGNAL PROCESSING

Credits: 3-0-0: 3

Pre-requisites: Nil **Year: 2015**

Course Objectives:

- To study detail in detail about digital signal processors
- Make a knowledge about current trends in digital signal processors

Syllabus

Digital signal processor, algorithms, applications and current trends in digital signal processors

Course Outcome:

On successful completion of this subject, the student should be capable of

- Analyze the Digital signal processors
- Analyze the applications and current trends

Text Books:

1. Digital Signal Processing Implementation Using the TMS320C6000 DSP Platform, 1st Edition; by: NaimDahnoun
2. DSP Applications using 'C' and the TMS320C6X DSK, 1st Edition; by: RulphChassaing
3. Digital Signal Processing: A System Design Approach, 1st Edition; by: David J Defatta J, Lucas Joseph G &Hodkiss William S; John Wiley
4. Digital Signal Processing with Field Programmable Gate Arrays: 2nd Edition, by: U. Meyer – Base, Springer
5. Real - Time Digital Signal Processing: Implementations, Applications, and Experiments with the TMS320C55X, Kuo, Sen M, Lee, Bob H, John Wiley & Sons Ltd.

REFERENCE BOOKS:

1. Digital Signal Processing, Third Edition, Sanjit K. Mitra, Tata McGRWA Hill
2. Digital Signal Processing – A Practical Guide for Engineers and Scientists, Steven W. Smith, Elsevier

NEHRU COLLEGE OF ENGINEERING & RESEARCH CENTRE
PRINCIPAL
Nehru College of
Engineering and Research Centre

COURSE PLAN

08 EC 6342(C) DESIGN OF DIGITAL SIGNAL PROCESSING (L-T-P : 3-0-0) CREDITS:3		
MODULES	**Contact hours**	**Sem.Exam Marks;%**
MODULE : 1 **Digital Signal Processor:** TMS320C6713 or any other popular DSP from Texas Instruments is covered under this module Architecture: CPU Architecture, Internal Memory, CPU Data Paths control Programming: Instruction Set and Addressing Modes	6	15
MODULE : 2 Code Composer Studio, Code Generation Tools, Code Composer Studio Debug Tools DSP Peripherals: Multichannel Buffered Serial Port, Transmission & Reception Timers Memory of DSP: Internal Data/Program Memory External Memory Interface	6	15
FIRST INTERNAL TEST		
MODULE : 3 **Digital Signal Processing Algorithms:** Filter Design: FIR Digital filter design. Fourier Transform: DFT, FFT, Spectral Analysis,DTMF Speech Processing Algorithms	6	15
MODULE : 4 Real-time Implementation: Implementation of Real-time FIR Digital filter using DSP.Implementation of Real-time Fast Fourier Transform applications using the DSP Implementation of DTMF Tone Generation and Detection. Implementation of Speech processing applications	6	15
SECOND INTERNAL TEST		
MODULE :5 **Current trends in Digital Signal Processor:** FPGA Technology, DSP Technology Requirements, Design implementation, Multiply Accumulator (MAC) and Sum of Product (SOP), Implementation of Serial/Parallel Convolver using FPGAs,FPGA Based DSP System Design	7	20
MODULE : 6 FIR filters, FIR Theory, Designing FIR filters, Direct Window Design method, Constant Coefficient FIR Design, Direct FIR Design, Cooley-Tukey FFT Algorithm implementation using FPGA	8	20

NEHRU COLLEGE OF ENGINEERING & RESEARCH CENTRE
PALAKKAD
THIRUVILWAMALA
THRISSUR DT.

PRINCIPAL
Nehru College of
Engineering and Research Centre
Pampady, Thiruvilwamala, Thrissur

08 EC 6352(A) HIGH SPEED DIGITAL DESIGN

Pre-requisites: Nil

Credits: 3-0-0: 3
Year: 2015

Course Objectives:

- To study detail in high speed digital circuits
- Power distribution and noise in high speed digital circuits

Syllabus

Introduction to high speed digital design, Power distribution and noise, Signalling convention and circuits, Timing convention and synchronizations

Course Outcome:

On successful completion of this subject, the student should be capable of

- Analyze the basic idea of high speed digital design
- Analyze the power distribution and noise

Text Books:

1. Howard Johnson and Martin Graham, "High Speed Digital Design: A Handbook of Black Magic",3rd Edition, (Prentice Hall Modern Semiconductor Design Series' Sub Series: PH Signal Integrity Library), 2006
2. Stephen H. Hall, Garrett W. Hall, and James A. McCall " System Design",Wiley , 2007
3. Kerry Bernstein, K.M. Carrig, Christopher M. Durham, and Patrick R. Hansen "High Speed CMOS Design Styles", Springer Wiley 2006
4. Ramesh Harjani "Design of High-Speed Communication Circuits (Selected Topics in Electronics and Systems)" World Scientific Publishing Company 2006

REFERENCE BOOKS:

1. William S. Dally & John W. Poulton; Digital Systems Engineering, Cambridge University Press, 1998
2. Masakazu Shoji; High Speed Digital Circuits, Addison Wesley Publishing Company, 1996
3. Jan M, Rabaey, et all; Digital Integrated Circuits: A Design perspective, Second Edition, 2003

NEHRU COLLEGE OF ENGINEERING & RESEARCH CENTRE THIRUMALAYAMPATHY THRISSUR DT.

PRINCIPAL
Nehru College of
Engineering and Research Centre
Pampady, Thiruvilwamala, Thrissur Dt
Pin 680 597, Kerala

COURSE PLAN

08 EC 6352(A) HIGH SPEED DIGITAL DESIGN(L-T-P : 3-0-0) CREDITS:3		
MODULE S	**Contact hours**	**Sem.Exam Marks;%**
MODULE : 1 Frequency, time and distance - Capacitance and inductance effects - High seed properties of logic gates - Speed and power	**6**	**15**
MODULE : 2 Modelling of wires -Geometry and electrical properties of wires - Electrical models of wires - transmission lines - lossless LC transmission lines - lossy LRC transmission lines - special transmission lines	**6**	**15**
FIRST INTERNAL TEST		
MODULE : 3 Power supply network - local power regulation - IR drops - area bonding - onchip bypass capacitors - symbiotic bypass capacitors - power supply isolation	**6**	**15**
MODULE : 4 Noise sources in digital system - power supply noise - cross talk – inter symbol interference. **Signalling convention and circuits**-Signalling modes for transmission lines -signalling over lumped transmission media	**6**	**15**
SECOND INTERNAL TEST		
MODULE : 5 signalling over RC interconnect - driving lossy LC lines - simultaneous bi-directional signalling - terminations - transmitter and receiver circuits- **Timing convention and synchronisation**-Timing fundamentals - timing properties of clocked storage elements	**7**	**20**
MODULE : 6 signals and events -open loop timing level sensitive clocking - pipeline timing - closed loop timing - clock distribution - synchronization failure and meta stability - PLL and D LL based clock aligners	**8**	**20**

NEHRU COLLEGE OF ENGINEERING & RESEARCH CENTRE
PAMPADY THRUVILVAMALA THRISSUR DT.

PRINCIPAL
Nehru College of Engineering and Research Centre
Pampady, Thiruvilvamala, Thrissur Dt
Pin-680597, Kerala

08 EC 6352(B) SOC DESIGN AND VERIFICATION

Pre-requisites: Nil

Credits: 3-0-0: 3
Year: 2015

Course Objectives:

- To familiarize the design of SoC process using few techniques and verify the issues regarding that andalso todesign the communication architecture for SoC's
- Power distribution and noise in high speed digital circuits

Syllabus

Introduction to system on chip design process, Marco design process, SoC verification, Design of communication architecture of SoC's

Course Outcome:

On successful completion of this subject, the student should be capable of

- Analyze the SoC design process
- Analyze the design of communication architecture for SoC's

Text Books:

1. "SoC Verification Methodology and Techniques", Prakash Rashinkar Peter Paterson and Leena Singh. Kluwer Academic Publishers, 2001.

2. "Reuse Methodologymanualfor System On A ChipDesigns", MichaelKeating, Pierre Bricaud, Kluwer Academic Publishers, second edition,2001.

NEHRU COLLEGE OF ENGINEERING & RESEARCH CENTRE THIRUVILWAMALA THRISSUR DT.

PRINCIPAL
Nehru College of
Engineering and Research Centre
Thiruvilwamala, Thrissur Dt
Pin 680 597 Kerala

COURSE PLAN

08 EC 6352(B) SOC DESIGN AND VERIFICATION (L-T-P : 3-0-0) CREDITS:3		
MODULES	**Contact hours**	**Sem.Exam Marks;%**
MODULE 1 : **System On Chip Design Process:** A canonical SoC Design, SoC Design flow waterfall vs spiral, top down vs Bottom up. Specification requirement, Types of Specification	6	15
MODULE : 2 System Design process, System level design issues, Soft IP Vs Hard IP, Design for timing closure, Logic design issues Verification strategy, On chip buses and interfaces, Low Power, Manufacturing test strategies.	6	15
FIRST INTERNAL TEST		
MODULE:3 **Macro Design Process:** Top level Macro Design, Macro Integration, Soft Macro productization, Developing hard macros, Design issues for hard macros, Design, System Integration wit reusable macros.	6	15
MODULE : 4 **SoC Verification:** Verification technology options, Verification methodology, Verification languages, Verification approaches, and Verification plans.	6	15
SECOND INTERNAL TEST		
MODULE : 5 System level verification, Block level verification, Hardware/software co verification and Static net list verification. Verification architecture, Verification components, Introduction to VMM, OVM and UVM.	7	20
MODULE : 6 **Design of Communication Architectures For SoCs:**On chip communication architectures, System level analysis for designing communication, Design space exploration, Adaptive communication architectures, Communication architecture tuners, Communication architectures for energy/battery efficient systems. Introduction to bus functional models and bus functional model based verification.	8	20

NEHRU COLLEGE OF ENGINEERING & RESEARCH CENTRE
PAMPADY, THIRUVILWAMALA, THRISSUR DT.

PRINCIPAL
Nehru College of
Engineering and Research Centre
Pampady, Thiruvilwamala, Thrissur Dt
Pin - 680 597, Kerala

08 EC 6352(C) NANO ELECTRONICS

Credits: 3-0-0: 3
Pre-requisites: Nil **Year: 2015**

Course Objectives:

- To impart the idea of nano electronics technology in detail for the application of devices

Syllabus

Introduction to nano-electronics, Characterization, in organic semiconductor nanostructures, Fabrication techniques, physical processes. Methods of measuring properties structure, Applications

Course Outcome:

On successful completion of this subject, the student should be capable of

- Analyze the fundamentals of nano electronics
- Analyze the methods of measuring structures

Text Books:

1. Ed Robert Kelsall,IanHamley,MarkGeoghegan, " Nanoscale science and technology" ,John wiley and sons,2007.
2. Charles P Poole,Jr,Frank J owens, "Introduction to Nanotechnology",Johnwiley,copyright 2006,Reprint 2011.
3. Ed William A Goddard III,Donald W Brenner,SergeyEdwardLyshevski,Gerald J Lafrate, " Hand Book of Nanoscience Engineering and Technology" ,CRC press,2003

NEHRU COLLEGE OF ENGINEERING & RESEARCH CENTRE
PAMPADY
THIRUVILWAMALA
THRISSUR DT.

PRINCIPAL
Nehru College of
Engineering and Research Centre
Pampady, Thiruvilwamala, Thrissur Dt

COURSE PLAN

08 EC 6352(C) NANO ELECTRONICS(L-T-P : 3-0-0) CREDITS:3		
MODULES	**Contact hours**	**Sem.Exam Marks;%**
MODULE : 1 **Introduction:** Overview of nano science and engineering. Development milestones in micro fabrication and electronic industry. Moores law and continued miniaturization., Classification of Nanostructures, Electronic properties of atoms and solids: Isolated atom, Bonding between atoms, Giant molecular solids, Free electron models and energy bands, crystalline solids, Periodicity of crystal lattices, Electronic conduction, effects of nano meter length scale, Fabrication methods: Top down processes, Bottom up processes methods for templating the growth of nano materials, ordering of nano systems.	6	15
MODULE : 2 **Characterization**: Classification, Microscopic techniques, Field ion microscopy, scanning probe techniques, diffraction techniques: bulk, surface, spectroscopy techniques: photon, radiofrequency, electron, surface analysis and dept profiling: electron, mass, Ion beam, Reflectrometry, Techniques for property measurement: mechanical, electron, magnetic, thermal properties	6	15
FIRST INTERNAL TEST		
MODULE : 3 .**Inorganic semiconductor nanostructures**: overview of semiconductor physics. Quantum confinement in semiconductor nanostructures: quantum wells, quantum wires, quantum dots, super-lattices, band offsets, electronic density of states.	6	15
MODULE : 4 **Fabrication techniques**: requirements of ideal semiconductor, epitaxial growth of quantum wells, lithography and etching, cleaved edge over growth, growth of vicinal substrates, strain induced dots and wires, electro statically induced dots and wires, Quantum well width fluctuations, thermally annealed quantum wells, semiconductor nano crystals, collidal quantum dots, self- assembly techniques.	6	15
SECOND INTERNAL TEST		
MODULE : 5 **Physical processes:** modulation doping, quantum hall effect, resonant tunneling, charging effects, ballistic carrier transport, Inter band absorption, intra band absorption, Light emission processes, phonon bottleneck, quantum confined stark effect, nonlinear effects, coherence and dephasing, characterization of semiconductor nanostructures: optical electrical and structural **Methods of measuring properties:structure:**atomic,crystallography,microscopy,spectroscopy. Properties of	7	20

PRINCIPAL
Nehru College of
Engineering and Research Centre
Pambady, Thiruvilvamala, Thrissur Dt
Pin-680 501, Kerala

nanoparticles: metal nano clusters, semiconducting nano particles, rare gas and molecular clusters, methods of synthesis(RF, chemical, thermolysis, pulsed laser methods)		
MODULE : 6 Carbon nanostructures and its applications(field emission and shielding, computers, fuel cells, sensors, catalysis).Self assembling nanostructure molecular materials and devices: building blocks, principles of self assembly, methods to prepare and pattern nanoparticles, template nanostructures, liquid crystal meso phases. Nanomagnetic materials and devices: magnetism, materials, magneto resistance, nanomagnetism in technology, challenges facing nanomagnetism.**Applications**: Injection lasers, quantum cascade lasers, single photon sources, biological tagging, optical memories, coulomb blockade devices, photonic structures, QWIP's, NEMS, MEMS.	**8**	**20**

NEHRU COLLEGE OF ENGINEERING & RESEARCH CENTRE
THIRUVALLA
THRISSUR-DT

PRINCIPAL
Nehru College of
Engineering and Research Centre
Thiruvilwamala, Thrissur Dt
Pin - 680 597, Kerala

THIRD SEMESTER

08 EC 7313(A)FPGA ARCHITECTURE AND APPLICATIONS

Credits: 3-0-0: 3

Pre-requisites: Nil **Year: 2015**

Course Objectives:

- To impart the idea of programmable logic devices,FPGA's,FSM
- It also give the idea about system level design

Syllabus

Overview of programmable logic devices,FPGA'S,finite state machines,architectures,petrinets,system level design,EDAtool.Casestudies,design consideration using FPGA parallel adder cell

Course Outcome:

On successful completion of this subject, the student should be capable of

- Understanding about Programmable logic devices
- Understanding about system level design

Text Books:

1. Field Programmable Gate Array Technology - S. Trimberger, Edr, 1994, Kluwer Academic Publications.
2. Engineering Digital Design - RICHARD F.TINDER, 2nd Edition, Academic press.
3. Fundamentals of logic design-Charles H. Roth, 4th Edition Jaico Publishing House.

REFERENCE BOOKS:

1. Digital Design Using Field Programmable Gate Array, P.K. Chan & S. Mourad, 1994, Prentice Hall.
2. Field programmable gate array, S. Brown, R.J. Francis, J. Rose, Z.G. Vranesic, 2007, BS

NEHRU COLLEGE OF ENGINEERING & RESEARCH CENTRE THIRUVILWAMALA THRISSUR-DT

PRINCIPAL
Nehru College of
Engineering and Research Centre
Pampady Thiruvilwamala, Thrissur Dt
Pin 680 597 Kerala

COURSE PLAN

08 EC 7313(A): FPGA ARCHITECTURE AND APPLICATIONS (L-T-P : 3-0-0) CREDITS:3		
MODULES	**Contact hours**	**Sem.Exam Marks;%**
MODULE : 1 Programmable logic Devices: ROM, PLA, PAL, CPLD, FPGA Features, Architectures and Programming. Applications and Implementation of MSI circuits using Programmable logic Devices.	6	15
MODULE : 2 FPGAs: Field Programmable Gate Arrays- Logic blocks, routing architecture, design flow, technology mapping for FPGAs, Case studies Xilinx XC4000 & ALTERA's FLEX 8000/10000 FPGAs	6	15
FIRST INTERNAL TEST		
MODULE : 3 Introduction to advanced FPGAs: Xilinx Virtex and ALTERA Stratix. Finite State Machines (FSM): Top Down Design, State Transition Table, State assignments for FPGAs	6	15
MODULE : 4 Realization of state machine charts using PAL, Alternative realization for state machine charts using microprogramming, linked state machine, encoded state machine	6	15
SECOND INTERNAL TEST		
MODULE : 5 FSM Architectures: Architectures Centered around non registered PLDs, Design of state machines centered around shift registers, One Hot state machine, Petrinets for state machines-Basic concepts and properties, Finite State Machine-Case study.	7	20
MODULE : 6 System Level Design: Controller, data path designing, Functional partition, Digital front end digital design tools for FPGAs. System level design using mentor graphics/Xilinx EDA tool (FPGA Advantage/Xilinx ISE), Design flow using FPGAs. Case studies: Design considerations using FPGAs of parallel adder cell, parallel adder sequential circuits, counters, multiplexers, parallel controllers.	8	20

NEHRU COLLEGE OF ENGINEERING & RESEARCH CENTRE THIRUVILWAMALA THRISSUR

PRINCIPAL
Nehru College of
Engineering and Research Centre
Pampady, Thiruvilwamala, Thrissur Dt
Pin - 680 597 Kerala

08 EC 7313(B)MIXED SIGNAL SYSTEM DESIGN

Credits: 3-0-0: 3

Pre-requisites: Nil **Year: 2015**

Course Objectives:

- To fundamentals concept about PN junction, bipolar devices etc
- It also give the idea about Digital and analog sub circuits

Syllabus

Introduction about basic active components, digital sub circuits, analog sub circuits, Data converters: DAC, ADC, oversampling data converters

Course Outcome:

On successful completion of this subject, the student should be capable of

- Analyze the Programmable logic devices
- Analyze the system level design

Text Books:

1. Gray Paul R, Meyer, Robert G, Analysis and Design of Analog Integrated Circuits, 3rd edition, John Wiley & Sons.
2. Jacob Baker, "CMOS Mixed-Signal circuit design", A John Willy & Sons, inc., publications, 2003.
3. Professor Bernhard Boser -"Analysis and Design of VLSI Analog-Digital Interface Integrated Circuits" "Addison Wisely publications"(1991).

REFERENCE BOOKS:

1. D A John, Ken Martin, Analog Integrated Circuit Design, 1st Edition, John Wiley
2. CMOS Analog Circuit Design, 2nd edition; by: Allen, Phillip E, Holberg , Douglas R, Oxford University Press, (Indian Edition
3. Ken Martin, Digital Integrated Circuit Design, John Wiley

NEHRU COLLEGE OF ENGINEERING & RESEARCH CENTRE
THIRUVILWAMALA THRISSUR DT

PRINCIPAL
Nehru College of
Engineering and Research Centre
Pampady, Thiruvilwamala, Thrissur Dt
Pin - 680 597, Kerala

COURSE PLAN

08 EC 7313(B): MIXED SIGNAL SYSTEM DESIGN (L-T-P : 3-0-0) CREDITS:3		
MODULES	**Contact hours**	**Sem.Exam Marks;%**
MODULE : 1 **Introduction:**PN Junctions, Bipolar Vs Unipolar Devices, MOS Transistor operation, MOS Transistor as a Switch, NMOS ,PMOS and CMOS Switches, CMOS Inverter AC and DC Characteristics, Analog Signal Processing, Example of Analog Mixed Signal Circuit Design	6	15
MODULE : 2 Example of Analog Mixed Signal Circuit Design **Digital Sub Circuits:** CMOS Logic implementation basics- Logic gates and Flip flops –Transmission Gates, TG based implementation of multiplexers, de-multiplexers.	6	15
FIRST INTERNAL TEST		
MODULE : 3 Encoders, decoders. Digital Circuits like ALU, Comparator, Parity generator, Timer, PWM,SRAM and DRAM, CAM, **Analog Sub circuits:** Ideal Operational Amplifier	6	15
MODULE : 4 Inverting and Non-inverting configuration Differential amplifier basics .VCO, PLL, Comparator characteristics, two stage open loop comparator	6	15
SECOND INTERNAL TEST		
MODULE : 5 Switched capacitor fundamentals, Switched capacitor amplifier **Data Converters: DAC** : Static &Dynamic Charatersitics,1 Bit DAC, String DAC, Fully Decoded DAC,PWM DAC, Current scaling, voltage scaling DACs	7	20
MODULE : 6 **ADC** : Static &Dynamic Characteristics, Nyquist Criteria , Sample & Hold Circuit, Quantization error, Concept of over sampling, Counting ADC, Tracking ADC, Successive approximation ADC, Flash ADC, Dual Slope ADC **Over sampling Data Converters** : Over sampling fundamentals, Delta –Sigma Converter basics,∑ Modulator	8	20

NEHRU COLLEGE OF ENGINEERING & RESEARCH CENTRE
PAMPADY
THIRUVILWAMALA
THRISSUR DT.

PRINCIPAL
Nehru College of
Engineering and Research Centre
Pampady, Thiruvilwamala, Thrissur Dt.
Pin - 680 597, Kerala

08 EC 7323(A) SYSTEM VERILOG

Credits: 3-0-0: 3

Pre-requisites: Nil **Year: 2015**

Course Objectives:

- To impart the basics of introduction to functional verification languages
- Make a idea about object oriented programming

Syllabus

Introduction to functional verification languages, classes and objects ,inheritance, system verilog assertion, Basics of properties and sequences, coverage driven verification and functional coverage in SV

Course Outcome:

On successful completion of this subject, the student should be capable of

- Applying functional verification languages
- Applying the idea about system verilog

Text Books:

1. "System Verilog for Design" : A Guide to Using System Verilog for Hardware Design and Modeling Sutherland, Stuart, David mann, Simon, Flake, Peter2nd ed., 2006
2. "SystemVerilog for Verification": A Guide to Learning the Testbench Language Features, Chris Spear, 2006
3. "Hardware Verification with System Verilog": An Object-Oriented Framework Mintz, Mike, Ekendahl, Robert 2007

REFERENCE BOOKS:

1. "Writing Test benches using System Verilog" Bergeron, Janick 2006,
2. "A Practical Guide for System Verilog Assertions" Meyyappan Ramanathan

NEHRU COLLEGE OF ENGINEERING & RESEARCH CENTRE
PAMPADY
THIRUVILWAMALA
THRISSUR-DT.

PRINCIPAL
Nehru College of
Engineering and Research Centre
Pampady, Thiruvilwamala, Thrissur Dt
Pin - 680597, Kerala

COURSE PLAN

08 EC 7323(A) SYSTEM VERILOG (L-T-P : 3-0-0) CREDITS:3		
MODULES	**Contact hours**	**Sem.Exam Marks;%**
MODULE : 1 Introduction to functional verification languages, Introduction to System Verilog, System Verilog data types	6	15
MODULE : 2 System Verilog procedures, Interfaces and modports, System Verilog routines.	6	15
FIRST INTERNAL TEST		
MODULE : 3 Introduction to object oriented programming, Classes and Objects, Inheritance, Composition, Inheritance v/s composition,	6	15
MODULE : 4 Virtual methods. Parameterized classes, Virtual interface, Using OOP for verification, System Verilog Verification Constructs	6	15
SECOND INTERNAL TEST		
MODULE : 5 System Verilog Assertions: Introduction to assertion, Overview of properties and assertion, Basics of properties and sequences, Advanced properties and sequences, Assertions in design and formal verification, some guidelines in assertion writing.	7	20
MODULE : 6 Coverage Driven Verification and functional coverage in SV: Coverage Driven Verification, Coverage Metrics, Code Coverage, Introduction to functional coverage, Functional coverage constructs, Assertion Coverage, Coverage measurement, Coverage Analysis SV and C interfacing: Direct Programming Interface (DPI)	8	20

NEHRU COLLEGE OF ENGINEERING & RESEARCH CENTRE
PAMPADY
THIRUVILWAMALA
THRISSUR-DT.

PRINCIPAL
Nehru College of
Engineering and Research Centre
Pampady, Thiruvilwamala, Thrissur Dt
Pin - 680 597, Kerala

NEHRU COLLEGE OF ENGINEERING & RESEARCH CENTRE
PAMPADY
THIRUVILWAMALA
THRISSUR DT.

PRINCIPAL
Nehru College of
Engineering and Research Centre
Pampady, Thiruvilwamala, Thrissur Dt.
Pin - 680 597, Kerala

08 EC 7323(C) VLSI SIGNAL PROCESSING

Credits: 3-0-0: 3

Pre-requisites: Nil **Year: 2015**

Course Objectives:

- To impart the fundamentals and overview of DSP concepts
- It give the description about of digital filters

Syllabus

An overview of DSP concepts, Algorithm for fast convolution, Pipeline interleaving in digital filters,State variable description of digital filters

Course Outcome:

On successful completion of this subject, the student should be capable of

- Analyze the DSP
- Applying the idea of digital filters

Text Books:

1. K.K. Parhi, VLSI Digital Signal Processing Systems, John-Wiley, 1999.
2. Pirsch, P., Architectures for Digital Signal Processing, Wiley, 1999.

REFERENCE BOOKS:

1. S. Allworth, "Introduction to Real-time Software Design", Springer-Verlag, 1984.
2. C. M. Krishna, K. Shin, "Real-time Systems", Mc-Graw Hill, 1997
3. Peter Marwedel, G. Goosens, "Code Generation for Embedded Processors", Kluwer Academic Publishers, 1995.

NEHRU COLLEGE OF ENGINEERING & RESEARCH CENTRE
THIRUVILWAMALA, THRISSUR DT.

PRINCIPAL
Nehru College of
Engineering and Research Centre
Pampady, Thiruvilwamala, Thrissur Dt
Pin - 680 597, Kerala

COURSE PLAN

08 EC 7323(B) VLSI SIGNAL PROCESSING(L-T-P : 3-0-0) CREDITS:3		
MODULES	**Contact hours**	**Sem.Exam Marks;%**
MODULE : 1 An overview of DSP concepts-Linear system theory- DFT, FFT- realization of digital filters- Typical DSP algorithms- DSP applications	6	15
MODULE : 2 Data flow graph representation of DSP algorithm.- Loop bound and iteration bound Retiming and its applications.	6	15
FIRST INTERNAL TEST		
MODULE : 3 Algorithms for fast convolution- Algorithmic strength reduction in filters and transforms- DCT and inverse DCT- Parallel FIR filters	6	15
MODULE : 4 Pipelining of FIR filters- Parallel processing- Pipelining and parallel processing for low power. Pipeline interleaving in digital filters	6	15
SECOND INTERNAL TEST		
MODULE : 5 Pipelining and parallel processing for IIR filters-Low power IIR filter design using pipelining and parallel processing- Pipelined adaptive digital filters.	7	20
MODULE : 6 State variable description of digital filters- Round off noise computation using state variable description- Scaling using slow-down, retiming and pipelining.	8	20

PRINCIPAL
Nehru College of
Engineering and Research Centre
Pampady, Thiruvilwamala, Thrissur Dt
Pin - 680 597, Kerala

NEHRU COLLEGE OF ENGINEERING AND RESEARCH CENTRE
(NAAC Accredited)
(Approved by AICTE, Affiliated to APJ Abdul Kalam Technological University, Kerala)

Electrical and Electronics Engineering

Course No.	Course Name	L-T-P -Credits	Year of Introduction
EE201	CIRCUITS AND NETWORKS	3-1-0-4	2016

Prerequisite: Nil

Course Objectives:

To learn about various techniques available to solve various types of circuits and networks

To gain the capability to synthesize a circuit for a particular purpose.

Syllabus AC Circuit Analysis(Steady State AC Analysis), Network topology, Transient analysis,

Laplace transform– properties , Transformed circuits, Two port networks, Symmetrical two port reactive networks as filters, Network functions, Network Synthesis

Expected outcome.

Ability to solve any DC and AC circuits

Ability to apply graph theory in solving networks

Ability to apply Laplace Transform to find transient response

Ability to synthesize networks

Text Book:

1. Hayt and Kemmerly :Engineering Circuit Analysis, 8e, Mc Graw Hill Education , New Delhi,2013.
2. Sudhakar and Shyam Mohan- Circuits and Networks: Analysis and Synthesis, 5e, Mc Graw HillEducation,

Data Book (Approved for use in the examination): Nil

References:

1. Siskand C.S : Electrical Circuits ,McGrawHill
2. Joseph. A. Edminister: Theory and problems of Electric circuits,TMH
3. D Roy Chaudhuri: Networks and Systems, New AgePublishers
4. A . Chakrabarti : Circuit Theory (Analysis and Synthesis),Dhanpat Rai&Co
5. Valkenberg : Network Analysis ,Prentice Hall ofIndia
6. B.R. Gupta: Network Systems and Analysis, S.Chand & Companyltd

Course Plan

Module	Contents	Hours	End Sem. Exam Marks
I	Network theorems – Superposition theorem – Thevenin's theorem – Norton's theorem – Reciprocity Theorem – Maximum power transfer theorem – dc and ac steady state analysis – dependent and independent sources	9 hours	15%
II	Network topology – graph, tree, incidence matrix – properties of incidence matrix – fundamental cut sets – cut set matrix – tie sets – fundamental tie sets – tie set matrix – relationships among incidence matrix, cut set matrix & tie set matrix – Kirchoff's laws in terms of network topological matrices – formulation and solution of network equations using topological methods	9 hours	15%

NEHRU COLLEGE OF ENGINEERING & RESEARCH CENTRE PAMPADY THIRUVILWAMALA, THRISSUR-DT

PRINCIPAL
Nehru College of
Engineering and Research Centre
Pampady Thiruvilwamala, Thrissur Dt
Pin 680 597 Kerala

FIRST INTERNAL EXAMINATION			
III	Steady state and transient response – DC response & sinusoidal response of RL, RC and RLC series circuits	**9hours**	15%
IV	Application of Laplace transform in transient analysis – RL, RC and RLC circuits (Series and Parallel circuits) – step and sinusoidal response Transformed circuits – coupled circuits - dot convention - transform impedance/admittance of RLC circuits with mutual coupling – mesh analysis and node analysis of transformed circuits – solution of transformed circuits including mutually coupled circuits ins-domain	**10 hours**	15%
SECOND INTERNAL EXAMINATION			
V	Two port networks – Z, Y , h, T parameters – relationship between parameter sets – condition for symmetry & reciprocity – interconnections of two port networks – driving point and transfer immittance – T-π transformation.	**9hours**	20%
VI	Network functions–Network synthesis-positive real functions and Hurwitz polynomial-synthesis of one port network with two kinds of elements-Foster form I&II-Cauer form I&II.	**8hours**	20%
END SEMESTER EXAM			

QUESTION PAPER PATTERN (End semester exam)

Part A: 8 questions.

One question from each module of Module I - IV; and two each from Module V & VI. Student has to answer all questions. (8 x5)=40

Part B: 3 questions uniformly covering modules I&II

Student has to answer any 2 questions: (2 x 10)=20

Part C: 3 questions uniformly covering modules III&IV

Student has to answer any 2 questions: (2 x 10)=20

Part D: 3 questions uniformly covering modules V&VI

Student has to answer any 2 questions: (2 x 10) =20

Note: Each question can have maximum of 4 sub questions, if needed.

NEHRU COLLEGE OF ENGINEERING & RESEARCH CENTRE THRISSUR

PRINCIPAL
Nehru College of
Engineering and Research Centre
Pampady Thiruvilwamala
Pin 680 597

Course No.	Course Name	L-T-P -Credits	Year of Introduction
EE203	ANALOG ELECTRONICS CIRCUITS	3-1-0-4	2016

Prerequisite : Nil

Course Objectives

- To impart an in depth knowledge in electronic semiconductor devices & circuits giving importance to the various aspects of design &analysis.
- To provide knowledge about different types amplifier & oscillator circuits and their design.
- To provide a thorough understanding of the operational amplifier circuits and their functions.

Prerequisites:Nil

Syllabus Diode clipping and clamping circuits and Zener voltage regulators, BJT biasing, AC Equivalent Circuit of BJT and CE amplifier analysis, Biasing of JFET and MOSFET, Frequency response of BJT and FET amplifiers, Power amplifiers using BJT, Feedback amplifiers &Oscillator Circuits

Operational Amplifier basics and OP-AMP Circuits, Wave form generation using Op-Amp, Multivibrators using Timer IC 555.

Expected outcome: Upon successful completion of the course the students will be able to

1. Design biasing scheme for transistorcircuits
2. Model BJT and FET amplifiercircuits
3. Choose a power amplifier with appropriate specifications for electronic circuitapplications
4. Design & analyse oscillator circuits using BJT
5. Choose Operational amplifier(OPAMP) for specific applications includingwaveform generation.
6. Design & implement analog circuits using OPAMPs

Text Book:

1. Malvino A. and D. J. Bates, Electronic Principles 7/e, Tata McGraw Hill,2010.
2. Boylestad R. L. and L. Nashelsky, Electronic Devices and Circuit Theory, 10/e,Pearson Education India,2009.
3. Choudhury R., Linear Integrated Circuits, New Age International Publishers.2008.

Data Book (Approved for use in the examination): Nil

References:

1. Floyd T. L., Fundamentals of Analog Circuits,, Pearson Education,2012.
2. Robert T. Paynterand John Clemons, Paynter's Introductory electronic devices &circuits, Prentice Hall Career & Technology, NewJersey.
3. Bell D. A., Electronic Devices and Circuits, Prentice Hall of India,2007.
4. Millman J. and C. C. Halkias, Integrated Electronics: Analog and Digital Circuits and Systems, Tata McGraw-Hill,2010.
5. Streetman B. G. and S. Banerjee, Solid State Electronic Devices, Pearson Education Asia, 2006.
6. Gayakward R. A., Op-Amps and Linear Integrated Circuits, PHI Learning Pvt. Ltd.,2012.

NEHRU COLLEGE OF ENGINEERING & RESEARCH CENTRE THRISSUR

PRINCIPAL
Nehru College of
Engineering and Research Centre
Pampady, Thiruvilwamala, Thrissur Dt

Course Plan			
Module	**Contents**	**Hours**	**Sem.ExamMarks**
I	**Diode Circuits**: Diode clipping circuits - Single level and two level clippers - Clamping circuits – Design of Zener Voltage Regulators. **Bipolar Junction Transistors** : Review of BJT characteristics- Operating point of a BJT – Factors affecting stability of Q point and DC Biasing – Biasing circuits: fixed bias, collector to base bias, voltage division bias and self bias. (Derivation of stability factors for Voltage Divider Biasing only) –Bias compensation using diode and thermistor. Low frequency equivalent circuit of BJT. Common Emitter amplifier - AC Equivalent Circuit – Role of coupling and emitter bypass capacitors – h parameter model of BJT -Amplifier gains and impedances calculations using h equivalentcircuit.	9 hours	15%
II	**Field Effect Transistors** : Review of JFET and MOSFET construction, working and characteristics- Biasing a JFET and MOSFET using voltage divider bias— CS and CD amplifiers – small signal models-FET as switch and voltage controlledresistance. **Frequency response of Amplifiers** : Miller's Theorem-BJT Internal Capacitances at high frequency operations-High frequency analysis of CE Amplifier using hybrid Pi Model -Low Frequency Response of Common Emitter amplifier — CE High frequency response-Gain bandwidth product- ——Low and High Frequency response of FET amplifiers	9 hours	15%
FIRST INTERNAL EXAMINATION			
III	**Multistage amplifiers** : Direct, RC, transformer coupled amplifiers – **Power amplifiers using BJT** : Class A, Class B and Class AB and class C- Conversion efficiency and distortion in power amplifiers. **Feedback Amplifiers**- Effect of positive and negative feedbacks- Basic feedback topologies and their properties	**8 hours**	15%
IV	**Oscillators** : Bark Hausen's criterion – RC oscillators (RC Phase shift oscillator and Wein Bridge oscillator) –LC oscillators (Hartley and Colpitt's)- Derivation of frequency of oscillation for the above mentioned oscillators- Crystal oscillator.	**8 hours**	15%

NEHRU COLLEGE OF ENGINEERING & RESEARCH CENTRE THRISSUR DT

PRINCIPAL
Nehru College of
Engineering and Research Centre
Pampady, Thiruvilwamala, Thrissur Dt
Pin 680 59

	Operational Amplifiers: Review of Operational Amplifier basics - Analysis of fundamental differential amplifier- Properties of ideal and practical Op-Amp - Gain, CMRR and Slew rate of IC 741 and LM 301– Drift and frequency compensation in OP Amps- Open loop and Closed loop Configurations-Concept of virtual short and its relation to negativefeedback		
SECOND INTERNAL EXAMINATION			
V	**OP-AMP Circuits** : Review of inverting and non-inverting amplifier circuits- Summing and difference amplifiers, Differentiator and Integrator circuits- Logarithmic amplifier- Half Wave Precision rectifier - Instrumentation amplifier. Comparators: Zero crossing and voltage level detectors, Schmitt trigger.	8hours	20%
VI	**Wave form generation using Op-Amps**: Square, triangular and ramp generator circuits using Op-Amp - Effect of slew rate on waveform generation. **Timer 555 IC** : Internal diagram of 555 IC– Astable and Monostable multivibrators using 555 IC. **Oscillator circuits using Op-amps** : RC Phase shift oscillator, Wein Bridge oscillator, LC Oscillators- (Derivation not required) - Crystal oscillator.	8 hours	20%
END SEMESTER EXAM			

QUESTION PAPER PATTERN (End semester exam)

Part A: 8 questions.

One question from each module of Module I - IV; and two each from Module V & VI.
Student has to answer all questions. (8 x5)=40

Part B: 3 questions uniformly covering modules I&II

Student has to answer any 2 questions: (2 x 10)=20

Part C: 3 questions uniformly covering modules III&IV

Student has to answer any 2 questions: (2 x 10)=20

Part D: 3 questions uniformly covering modules V&VI

Student has to answer any 2 questions: (2 x 10) =20

Note: Each question can have maximum of 4 sub questions, if needed.

NEHRU COLLEGE OF ENGINEERING & RESEARCH CENTRE THIRUVILWAMALA THRISSUR-DT

PRINCIPAL
Nehru College of
Engineering and Research Centre
Pampady Thiruvilwamala Thrissur Dt
Pin 680 597 Kerala

Course No.	Course Name	L-T-P -Credits	Year of Introduction
EE205	DC MACHINES AND TRANSFORMERS	3-1-0-4	2016

Prerequisite : Nil

Course Objectives

To give exposure to the students about the concepts of direct current machines and transformers, including their constructional details, principle of operation and performance analysis.

Syllabus:

Electromagnetic principles for Machines, electrodynamic equations and their solution, Magnetic Circuits for Machines, construction of DC machines, DC generators, DC motor, Transformers - single phase and three phase, Construction of single phase and three phase transformers, losses and efficiency, equivalent circuit, testing. Transformerconnections.

Expected outcome.

After the successful completion of this course, the students will be able to

1. identify dc generator types, and appreciate theirperformance
2. describe the principle of operation of dc motor and select appropriate motor types for differentapplications.
3. analyse the performance of different types of dcmotors
4. describe the principle of operation of single phasetransformers
5. analyse the performance of single phasetransformers
6. familiarize with the principle of operation and performance of three phaseransformers.

Text Book

1. Bimbra P. S., *Electrical Machinery*, 7/e, Khanna Publishers,2011.
2. Nagrath J. and D. P. Kothari, *Theory of AC Machines*, Tata McGraw Hill, 2006.

ReferenceBooks

1. Fitzgerald A. E., C. Kingsley and S. Umans, *Electric Machinery*, 5/e, McGraw Hill,1990.
2. Langsdorf M. N., *Theory of Alternating Current Machinery*, Tata McGraw Hill,2001.
3. Abhijith Chakrabarti, Sudipta Debnath, Electrical Machines, McGraw Hill Education,New Delhi2015.
4. Deshpande M. V., *Electrical Machines*, Prentice Hall India, New Delhi,2011.
5. Theodore Wilde, *Electrical Machines, Drives and Power System*, Pearson Ed. Asia2001.

Data Book (Approved for use in the examination): Nil

Course Plan

Module	Contents	Hours	Semester Exam Marks
I	Electromagnetic principles for Machines Electro dynamical equations and their solution – rotational motion system – mutually coupled coils – construction of DC machines – energy conversion in rotating electrical machines – eddy currents and eddy current losses – flux distribution curve in the airgap – armature windings – lap and wave windings – selection criteria – equalizer rings – dummy coils.	9 hours	15%
II	DC generators – EMF equation – methods of excitation – separately and self excited – shunt, series, compound – armature reaction – effects of armature reaction – demagnetizing & cross magnetizing ampere-turns – compensating windings – interpoles – commutation –methods to improve commutation – voltage build-up – no load	9 hours	15%

NEHRU COLLEGE OF ENGINEERING & RESEARCH CENTRE THRISSUR-DT

PRINCIPAL
Nehru College of
Engineering and Research Centre
Pampady, Thiruvilwamala, Thrissur Dt

	characteristics – load characteristics – losses and efficiency – power flow diagram – parallel operation – applications of dc generators.		
FIRST INTERNAL EXAMINATION			
III	DC motor – principle of operation – back emf – classification – torque equation – losses and efficiency – power flow diagram – performance characteristics of shunt, series and compound motors – starting of dc motors – necessity and types of starters – speed control – methods of speed control – testing – Swinburne's test – Hopkinson's test – separation of losses – retardation test – applications of dcmotors.	9 hours	15%
IV	Transformers – principle of operation – types and construction, core type and shell type construction, dry type transformers, cooling of transformers – ideal transformer – transformation ratio – dot convention – polarity test – practical transformer–kVArating–equivalentcircuit–phasor diagram.	9 hours	15%
SECOND INTERNAL EXAMINATION			
V	Transformer losses and efficiency – voltage regulation – OC & SC test – Sumpner's test – all day efficiency Autotransformer – saving of copper – current rating and kVA rating of autotransformers, parallel operation of single phase transformers, necessary and desirable conditions ofparallel operation, on load and off load tap changers.	9 hours	20%
VI	3-phase transformer – 3-phase transformer connections – Δ-Δ, Y-Y , Δ-Y , Y-Δ, V-V – vector groupings Yy0, Dd0, Yd1, Yd11, Dy1, Dy11 – Scott connection – three winding transformer – tertiary winding – percentage and per unit impedance – parallel operation of three phase transformers.	9 hours	20%
END SEMESTER EXAM			

QUESTION PAPER PATTERN (End semester exam)

Part A: 8 questions.

One question from each module of Module I - IV; and two each from Module V & VI.
Student has to answer all questions. (8 x5)=40

Part B: 3 questions uniformly covering modules I&II
Student has to answer any 2 questions: (2 x 10)=20

Part C: 3 questions uniformly covering modules III&IV
Student has to answer any 2 questions: (2 x 10)=20

Part D: 3 questions uniformly covering modules V&VI
Student has to answer any 2 questions: (2 x 10) =20

Note: Each question can have maximum of 4 sub questions, if needed.

NEHRU COLLEGE OF ENGINEERING & RESEARCH CENTRE THIRUVILWAMALA THRISSUR-DT

PRINCIPAL
Nehru College of
Engineering and Research Centre
Pampady Thiruvilwamala Thrissur
Pin 680 597 Kerala

Course No.	Course Name	L-T-P -Credits	Year of Introduction
EE207	COMPUTER PROGRAMMING	2-1-0-3	2016

Course Objectives

To impart knowledge about programming in C

To learn basics of PYTHON.

Syllabus Introduction to Programming, Basic elements of C, Control statements in C, Arrays and Strings, Functions, Storage classes ,Structures and Pointers, File Management in C, Introduction to Python

Expected outcome. 1. Ability to design programs using C language
2. Ability to develop simple programs using Python

Text Book:1)E. Balaguruswamy, *Programming in ANSI C*, Tata McGraw Hill, New Delhi
2) John V Guttag, Introduction to Computation and programming using Python, PHI Learning, New Delhi.

Data Book (Approved for use in the examination): Nil

References:

1. P. Norton, *Peter Norton's Introduction to Computers*, Tata McGraw Hill, NewDelhi
2. Byron S. Gottfried, Programming with C, Schaun Outlines –McGrawHill.
3. Ashok Kamthane, Programming with ANSI & Turbo C- Pearsoneducation
4. K.R Venugopal and S.R Prasad, Mastering C - Tata McGrawHill
5. Kelley, Al & Pohl, *A Book on C- Programming in C*, 4th Ed,, PearsonEducation

Course Plan

Module	Contents	Hours	Sem.ExamMarks
I	**Introduction to Programming**: Machine language, assembly language, and high level language. Compilers and assemblers. Flow chart and algorithm – Development of algorithms for simpleproblems. **Basic elements of C:** Structure of C program –Keywords, Identifiers, data types, Operators and expressions – Input and Output functions	5hours	15%
II	**Control statements in C:** *if, if-else, while, do-while and for statements, switch, break, continue, go to, and labels. Programming examples.*	7 hours	15%
	FIRST INTERNAL EXAMINATION		
III	**Arrays and Strings**: Declaration, initialisation, processing arrays and strings– two dimensional and multidimensional arrays –application of arrays. Example programs.	7 hours	15%
IV	**Functions :** Functions – declaring, defining, and accessing functions –parameter passing methods – – passing arrays to functions , Recursion . **Storage classes** – extern, auto, register and static. Example programs.	7 hours	15%
	SECOND INTERNAL EXAMINATION		

NEHRU COLLEGE OF ENGINEERING & RESEARCH CENTRE
Rampady
THIRUVILWAMALA
THRISSUR-DT.

PRINCIPAL
Nehru College of
Engineering and Research Centre
Rampady, Thiruvilwamala, Thrissur

V	**Structures** – declaration, definition and initialization of structures, unions **Pointers**: Concepts, declaration, initialization of pointer variables, Accessing a Variable through its Pointer Chain of Pointers, Pointer Expressions, Pointer Increments and Scale Factor, Pointers and Arrays, examples	**8 hours**	20%
VI	**File Management** – File operations, Input/Output Operations on Files, Random Access to Files ,File pointer. **Introduction to Python** :Basic Syntax, Operators, control statements, functions-examples.	**8hours**	20%
END SEMESTER EXAM			

QUESTION PAPER PATTERN (End semester exam)

Part A: 8 questions.

One question from each module of Module I - IV; and two each from Module V & VI.
Student has to answer all questions. (8 x5)=40

Part B: 3 questions uniformly covering modules I&II

Student has to answer any 2 questions: (2 x 10)=20

Part C: 3 questions uniformly covering modules III&IV

Student has to answer any 2 questions: (2 x 10)=20

Part D: 3 questions uniformly covering modules V&VI

Student has to answer any 2 questions: (2 x 10) =20

Note: Each question can have maximum of 4 sub questions, if needed.

NEHRU COLLEGE OF ENGINEERING & RESEARCH CENTRE THIRUVILWAMALA THRISSUR DT

PRINCIPAL
Nehru College of
Engineering and Research Centre
Pampady, Thiruvilwamala, Thrissur Dt
Pin - 680 597, Kerala

Course code	Course Name	L-T-P - Credits	Year of Introduction
EE301	POWER GENERATION, TRANSMISSION AND PROTECTION	3-1-0-4	2016

Prerequisite : Nil

Course Objectives

- To set a foundation on the fundamental concepts of Power System Generation,Transmission, Distribution and Protection.

Syllabus

Power Generation-conventional-hydrothermal, nuclear - non conventional solar and wind-economics of power generation-Power factor Improvement-Power transmission -line parameters -resistance- inductance and capacitance- Transmission line modelling- classifications -short line, medium line, long line-transmission line as two port network-parameters- derivation -Overhead lines- types of conductors-volume of conductors- Kelvin's law- Types of Towers-calculation of Sag and tension-
Insulators- types -corona-underground cables-H V DC transmission-Flexible A C transmission-
-need for protection-circuit breakers-protective relay types -Types of protection causes of over voltages - insulation coordination – Power Distribution system

Expected outcome .

The students will be able to

i. Know the basic aspects in the area of power generation, transmission, distribution and protection.

ii. Design power factor correction equipment, transmission line parameters, and decide upon the various protection schemes to be adopted in various cases.

Text Books:

1. D P Kothari and I Nagrath, "Power System Engineering," 2/e Tata McGraw Hills, 2008
2. Wadhwa, "Electrical Power system", Wiley Eastern Ltd. 2005

References:

1. A.Chakrabarti, ML.Soni, P.V.Gupta, V.S.Bhatnagar, "A text book of Power system Engineering" Dhanpat Rai, 2000
2. Grainer J.J, Stevenson W.D, "Power system Analysis", McGraw Hill
3. I.J.Nagarath & D.P. Kothari, "Power System Engineering", TMH Publication,
4. K.R Padiyar," FACTS Controllers for Transmission and Distribution" New Age International, New Delhi
5. Stevenson Jr. Elements of Power System Analysis, TMH
6. Sunil S Rao ,"Switch gear and Protection",Khanna Publishers

Course Plan

Module	Contents	Hours	Sem. Exam Marks
I	**Introduction: Typical layout of Power system Network** **Generation of Electric Power:** Overview of conventional (Hydro, Thermal and Nuclear) and Nonconventional Sources (Solar and Wind) (Block Diagram and Brief Description Only) **Economics of Generation:** Load factor, diversity factor, Load curve (Brief description only) Numerical Problems. Methods of power factor improvement using capacitors	9	15%
II	**Power Transmission** **Transmission Line Parameters:** Resistance, inductance and capacitance of 1-Φ, 2 wire lines-composite conductors	10	15%

NEHRU COLLEGE OF ENGINEERING & RESEARCH CENTRE
PAMPADY THIRUVILWAMALA THRISSUR-DT

PRINCIPAL
Nehru College of
Engineering and Research Centre
Pampady, Thiruvilwamala, Thrissur Dt
Pin - 680 597, Kerala

	(Derivation Required). Inductance and capacitance of 3-Φ lines. Symmetrical and unsymmetrical spacing-transposition-double circuit lines-bundled conductors (Derivation Required) .Numerical Problems **Modelling of Transmission Lines**: Classification of lines-short lines-voltage regulation and efficiency-medium lines-nominal T and Π configurations-ABCD constants- long lines- rigorous solution- interpretation of long line equation-Ferranti effect.		
FIRST INTERNAL EXAMINATION			
III	**Introduction of Overhead transmission and underground transmission** Conductors -types of conductors -copper, Aluminium and ACSR conductors -Volume of conductor required for various systems of transmission-Choice of transmission voltage, conductor size -Kelvin's law. Mechanical Characteristics of transmission lines – configuration-Types of Towers. Calculation of sag and tension-supports at equal and unequal heights -effect of wind and ice-sag template Insulators -Different types -Voltage distribution, grading and string efficiency of suspension insulators. Corona -disruptive critical voltage -visual critical voltage -power loss due to corona -Factors affecting corona - interference on communication lines.	9	15%
IV	Underground Cables -types of cables -insulation resistance -voltage stress -grading of cables -capacitance of single core and 3 -core cables -current rating. **HVDC Transmission:** Comparison between AC &DC Transmission ,Power flow equations and control, Types of DC links **Flexible AC Transmission systems**: Need and Benefits, SVC, Configuration of FC + TCR, Series compensation: Configuration of TCSC	8	15%
SECOND INTERNAL EXAMINATION			
V	**Need for power system protection.** **Circuit breakers** – principle of operation- formation of arc-Arc quenching theory- Restriking Voltage-Recovery voltage, RRRV (Derivation Required). Interruption of Capacitive currents and current chopping (Brief Description Only). Types of Circuit Breakers: Air blast CB – Oil CB – SF6 CB – Vacuum CB – CB ratings.		20%

NEHRU COLLEGE OF ENGINEERING & RESEARCH CENTRE
THIRUVILWAMALA
THRISSUR-DT

PRINCIPAL
Nehru College of
Engineering and Research Centre
Pampady Thiruvilwamala Dt
Pin 680

	Protective Relays- Zones of Protection, Essential Qualities-Classification of Relays -Electro mechanical, Static Relays, Microprocessor Based Relay. Electromechanical Relays-Attracted Armature, Induction disc, Thermal Relays (Brief Description only) Static Relays-Merits and Demerits, Basic components, Comparison and duality of Amplitude and Phase comparators. Static overcurrent, Differential, Distance Relays, Directional Relay-(principle and Block diagram only) Microprocessor Based Relay-Block diagram and flow chart of Over current Relay, Numerical Relay(Basics Only)	10	
VI	**Protection of alternator:** Stator inter turn, Earth fault Protection and Differential protection **Protection of transformers-** Percentage Differential Protection-Buchholz Relay **Protection of transmission lines**-Differential Protection-carrier current protection **Protection against over voltages**: Causes of over voltages - Surge diverters - Insulation co-ordination **Power distribution systems** –Radial and Ring Main Systems - DC and AC distribution: Types of distributors- bus bar arrangement -Concentrated and Uniform loading -Methods of solving distribution problems.	10	20%
END SEMESTER EXAM			

NEHRU COLLEGE OF ENGINEERING & RESEARCH CENTRE
THIRUVILWAMALA, THRISSUR-DT

PRINCIPAL
Nehru College of
Engineering and Research Centre
Pampady, Thiruvilwamala, Thrissur Dt
Pin - 680 597, Kerala

QUESTION PAPER PATTERN:

Maximum Marks: 100 Exam Duration: 3Hourrs.

Part A: 8 compulsory questions.

One question from each module of Module I - IV; and two each from Module V & VI.

Student has to answer all questions. (8 x5)=40

Part B: 3 questions uniformly covering Modules I & II. Student has to answer any 2 from the 3 questions: (2 x 10) =20. Each question can have maximum of 4 sub questions (a,b,c,d), if needed.

Part C: 3 questions uniformly covering Modules III & IV. Student has to answer any 2 from the 3 questions: (2 x 10) =20. Each question can have maximum of 4 sub questions (a,b,c,d), if needed.

Part D: 3 questions uniformly covering Modules V & VI. Student has to answer any 2 from the 3 questions: (2 x 10) =20. Each question can have maximum of 4 sub questions (a,b,c,d), if needed.

NEHRU COLLEGE OF ENGINEERING & RESEARCH CENTRE THIRUVILWAMALA, THRISSUR DT

PRINCIPAL
Nehru College of
Engineering and Research Centre
Pampady, Thiruvilwamala, Thrissur Dt
Pin - 680 597, Kerala

Course code	Course Name	L-T-P - Credits	Year of Introduction
EE302	ELECTROMAGNETICS	2-1-0-3	2016

Prerequisite: Nil

Course Objectives

- To develop a conceptual basis of electrostatics, magnetostatics, electromagnetic waves
- To understand various engineering applications of electromagnetics

Syllabus

Introduction to vector calculus, Electrostatics, Electrical potential, energy density and their applications. Magneto statics, magnetic flux density, scalar and vector potential and its applications, Time varying electric and magnetic fields, Electromagnetic waves

Expected outcome .

The students will be able to:

i. Analyze fields and potentials due to static charges
ii. Explain the physical meaning of the differential equations for electrostatic and magnetic fields
iii. Understand how materials are affected by electric and magnetic fields
iv. Understand the relation between the fields under time varying situations
v. Understand principles of propagation of uniform plane waves.
vi. Be aware of electromagnetic interference and compatibility

Text Book:

1. Nannapeni Narayana Rao, "Elements of Engineering Electromagnetics", Prentice Hall India
2. Sadiku M. N. O, *Elements of Electromagnetics*, Oxford university Press, 2010

Data Book (Approved for use in the examination):

References:

1. Cheng D. K., Field and Wave Electromagnetic, Pearson Education, 2013.
2. Edminister J. A., Electromagnetics, Schaum Outline Series , Tata McGraw-Hill, 2006.
3. Gangadhar K. A. and P. M. Ramanathan , Electromagnetic field theory , Khanna Publishers, 2009.
4. Hayt W. H. and J. A. Buck , Engineering Electromagnetics, 8/e, McGraw-Hill, 2012.
5. Inan U. S. and A. S. Inan, Engineering Electromagnetics, Pearson Education, 2010.
6. John Krauss and Daniel A. Fleisch, Electromagnetics with Applications, McGraw-Hill, 5th edition
7. Murthy T. V. S. A, Electromagnetic field, S. Chand Ltd, 2008.
8. Premlet B., Electromagnetic theory with applications, Phasor Books, 2000.
9. S.C.Mahapatra and Sudipta Mahapatra ,Principles of Electromagnetics, McGraw-Hill, 2015

Course Plan

Module	Contents	Hours	Sem. Exam Marks
I	**STATIC ELECTRIC FIELDS:** Introduction to Co-ordinate System – Rectangular – Cylindrical and Spherical Co- ordinate System – Gradient of a Scalar field, Divergence of a Vector field and Curl of a Vector field- Their Physical interpretation. Divergence Theorem, Stokes' Theorem. Numerical problems	6	15%
II	Coulomb's Law, Electric field intensity. Field due to a line charge, Sheet Charge and Continuous Volume Charge distribution. Electric Flux and Flux Density; Gauss's law and its application. Electric Potential-The Potential Gradient. The Electric dipole. The Equipotential surfaces. Capacitance - capacitance of co-axial cable, two wire line. Poisson's and Laplace's equations	8	15%
	FIRST INTERNAL EXAMINATION		

NEHRU COLLEGE OF ENGINEERING & RESEARCH CENTRE
PANIPADY THIRUVILWAMALA THRISSUR DT

PRINCIPAL
Nehru College of
Engineering and Research Centre
Panipady Thiruvilwamala, Thrissur Dt
Pin 680 59

III	STATIC MAGNETIC FIELD: Biot-Savart Law, Amperes Force Law.– Magnetic Field intensity due to a finite and infinite wire carrying a current–Magnetic field intensity on the axis of a circular and rectangular loop carrying a current –Magnetic vector potential, Magnetic flux Density and Ampere's circuital law and simple applications.	6	15%
IV	ELECTRIC AND MAGNETIC FIELDS IN MATERIALS—Electric Polarization-Nature of dielectric materials-Electrostatic energy and energy density–Boundary conditions for electric fields and magnetic fields–Conduction current and displacement current densities–continuity equation for current. Maxwell's Equation in Differential and integral form from Modified form of Ampere's circuital law, Faraday's Law and Gauss Law	8	15%
SECOND INTERNAL EXAMINATION			
V	TIME VARYING ELECTRIC AND MAGNETIC FIELDS:. Poynting Vector and Poynting Theorem – Power flow in a co-axial cable – Complex Average Poynting Vector. ELECTROMAGNETIC WAVES: Wave Equation from Maxwell's Equation – Uniform Plane Waves –Wave equation in Phasor form	7	20%
VI	Plane waves propagation in loss less and lossy dielectric medium and conducting medium. Plane wave in good conductor, surface resistance, Skin depth, Intrinsic Impedance and Propagation Constant in all medium. Phase and group velocity. Transmission lines: waves in transmission line –solution for loss less lines –characteristic impedance – VSWR – impedance matching. Introduction to Electromagnetic interference and compatibility.	7	20%
END SEMESTER EXAM			

QUESTION PAPER PATTERN:

Maximum Marks: 100 Exam Duration: 3Hourrs.

Part A: 8 compulsory questions.

One question from each module of Modules I - IV; and two each from Module V & VI.

Student has to answer all questions. (8 x5)=40

Part B: 3 questions uniformly covering Modules I & II. Student has to answer any 2 from the 3 questions: (2 x 10) =20. Each question can have maximum of 4 sub questions (a,b,c,d), if needed.

Part C: 3 questions uniformly covering Modules III & IV. Student has to answer any 2 from the 3 questions: (2 x 10) =20. Each question can have maximum of 4 sub questions (a,b,c,d), if needed.

Part D: 3 questions uniformly covering Modules V & VI. Student has to answer any 2 from the 3 questions: (2 x 10) =20. Each question can have maximum of 4 sub questions (a,b,c,d), if needed.

NEHRU COLLEGE OF ENGINEERING & RESEARCH CENTRE THRISSUR

PRINCIPAL
Nehru College of
Engineering and Research Centre
Pampady, Thiruvilwamala, Thrissur Dt
Pin

Course code	Course Name	L-T-P - Credits	Year of Introduction
EE303	Linear Control Systems	2-1-0-3	2016

Prerequisite: Nil

Course Objectives:

- To provide a strong foundation on the analytical and design techniques on classical control theory and modelling of dynamic systems

Syllabus :

Open loop-and closed loop control systems- Transfer function - Control system components-Steady stare error- static error coefficient- dynamic error coefficient-Stability Analysis- Root locus- Frequency domain analysis-Bode plot-polar plot-Nyquist stability criterion- Non-minimum phase system - transportation lag.

Expected outcome.

The students will have the ability to

i. develop mathematical models of various systems.

ii. analyse the stability aspects of linear time invariant systems.

Text Books:

1) Dorf R. C. and R. H. Bishop, Modern Control Systems, Pearson Education, 2011.
2) Nagarath I. J. and Gopal M., Control System Engineering, Wiley Eastern, 2008.
3) Nise N. S., Control Systems Engineering, 6/e, Wiley Eastern, 2010.
4) Ogata K., Modern Control Engineering, Prentice Hall of India, New Delhi, 2010.

References:

1) Gibson J. E., F. B. Tuteur and J. R. Ragazzini, Control System Components, Tata McGraw Hill, 2013
2) Gopal M., Control Systems Principles and Design, Tata McGraw Hill, 2008.
3) Imthias Ahamed T P, *Control Systems*, Phasor Books, 2016
4) Kuo B. C., Automatic Control Systems, Prentice Hall of India, New Delhi, 2002.

Course Plan

Module	Contents	Hours	Sem. Exam Marks
I	Open loop-and closed loop control systems: Transfer function of LTI systems-Mechanical and Electromechanical systems – Force voltage and force current analogy - block diagram representation - block diagram reduction - signal flow graph - Mason's gain formula - characteristic equation.	8	15%
II	Control system components: DC and AC servo motors – synchro - gyroscope - stepper motor - Tacho generator. Time domain analysis of control systems: Transient and steady state responses - time domain specifications - first and second order systems - step responses of first and second order systems.	6	15%
	FIRST INTERNAL EXAMINATION		
III	Error analysis - steady state error analysis - static error coefficient of type 0,1, 2 systems - Dynamic error coefficients. Concept of stability: Time response for various pole locations - stability of feedback system - Routh's stability criterion	7	15%
IV	Root locus - General rules for constructing Root loci – stability from root loci - effect of addition of poles and zeros.	7	15%
	SECOND INTERNAL EXAMINATION		
V	Frequency domain analysis: Frequency domain specifications- Analysis based on Bode plot - Log magnitude vs. phase plot,	7	20%

PRINCIPAL
Nehru College of
Engineering and Research Centre
Pampady, Thiruvilwamala, Thrissur Dt

VI	Polar plot- Nyquist stability criterion-Nichols chart - Non-minimum phase system - transportation lag.	7	20%
END SEMESTER EXAM			

QUESTION PAPER PATTERN:

Maximum Marks: 100 Exam Duration: 3Hourrs.

Part A: 8 compulsory questions.

One question from each module of Modules I - IV; and two each from Module V & VI.

Student has to answer all questions. (8 x5)=40

Part B: 3 questions uniformly covering Modules I & II. Student has to answer any 2 from the 3 questions: (2 x 10) =20. Each question can have maximum of 4 sub questions (a,b,c,d), if needed.

Part C: 3 questions uniformly covering Modules III & IV. Student has to answer any 2 from the 3 questions: (2 x 10) =20. Each question can have maximum of 4 sub questions (a,b,c,d), if needed.

Part D: 3 questions uniformly covering Modules V & VI. Student has to answer any 2 from the 3 questions: (2 x 10) =20. Each question can have maximum of 4 sub questions (a,b,c,d), if needed.

NEHRU COLLEGE OF ENGINEERING & RESEARCH CENTRE THIRUVILWAMALA THRISSUR

PRINCIPAL
Nehru College of
Engineering and Research Centre
Pampady, Thiruvilwamala, Thrissur Dt
Pin - 680 597, Kerala

Course code	Course Name	L-T-P -Credits	Year of Introduction
EE304	**Advanced Control Theory**	**3-1-0-4**	**2016**

Prerequisite: EE303 Linear control systems

Course Objectives:

- To provide a strong concept on the compensator design and on advanced control system analysis and design techniques
- To analyse the behaviour of discrete time systems and nonlinear control systems.

Syllabus:

Compensator design-Frequency domain approach-root locus method-Tuning of P, PI and PID controller-State space analysis of systems-state feedback controller design-sampled data control systems-Nonlinear systems-describing function-phase plane-Lyapunov method.

Expected outcome.

On successful completion, students will have the ability to

i. design compensators using classical techniques.
ii. analyse both linear and nonlinear system using state space methods.
iii. analyse the stability of discrete system and nonlinear system.

Text Book:

1. Hassan K Khalil, Nonlinear Systems, Prentice - Hall International (UK), 2002.
2. Kuo B.C, Analysis and Synthesis of Sampled Data Systems, Prentice Hall Publications.
3. Nagarath I. J. and Gopal M., Control System Engineering, Wiley Eastern, 2008.
4. Nise N. S., Control Systems Engineering, 6/e, Wiley Eastern, 2010.
5. Ogata K., Modern Control Engineering, Prentice Hall of India, New Delhi, 2010.

Data Book (Approved for use in the examination):

References:

1. Alberto Isidori, Nonlinear Control Systems, Springer Verlag, 1995.
2. Gibson J. E., F.B. Tuteur and J. R. Ragazzini, Control System Components, Tata McGraw Hill, 2013
3. Gopal M., Control Systems Principles and Design, Tata McGraw Hill, 2008.
4. Jean-Jacques E. Slotine & Weiping Li, Applied Nonlinear Control, Prentice-Hall., NJ, 1991.

Course Plan

Module	Contents	Hours	Sem. Exam Marks
I	Types of controller- Feedforward-feedback-cascade-P, PI and PID. Compensator design: Realization of compensators – lag, lead and lag-lead -Design of compensator using bode plot.	7	15%
II	Compensator design: Realization of compensators – lag, lead and lag-lead. Design of compensator using rootlocus. Design of P, PI and PID controller using Ziegler-Nichols tuning method.	7	15%
FIRST INTERNAL EXAMINATION			
III	State space analysis of systems: Introduction to state concept - state equation of linear continuous time systems, matrix representation of state equations. Phase variable and canonical forms of state representation-controllable, observable, diagonal	7	15%

NEHRU COLLEGE OF ENGINEERING AND RESEARCH CENTRE THIRUVILWAMALA THRISSUR

PRINCIPAL
Nehru College of
Engineering and Research Centre
Pampady, Thiruvilwamala, Thrissur Dt
Pin - 680 597

	and Jordan canonical forms- solution of time invariant autonomous systems, forced system-state transition matrix-relationship between state equations and transfer function. Properties of state transition matrix-Computation of state transition matrix using Laplace transform-Cayley-Hamilton method. Conversion from canonical form to phase variable form.		
IV	State feedback controller design: Controllability & observability. State feed-back design via pole placement technique. Sampled data control system: Pulse Transfer function-Stability of sampled data system -Routh Hurwitz criterion and Jury's test. Introduction to state-space representation of sampled data systems.	7	15%
SECOND INTERNAL EXAMINATION			
V	Nonlinear systems: Introduction - characteristics of nonlinear systems. Types of nonlinearities. Analysis through harmonic linearisation - Determination of describing function of nonlinearities (relay, dead zone and saturation only) - application of describing function for stability analysis of autonomous system with single nonlinearity.	7 hrs	20%
VI	Phase Plane Analysis: Concepts- Construction of phase trajectories for nonlinear systems and linear systems with static nonlinearities - Singular points – Classification of singular points. Definition of stability- asymptotic stability and instability Liapunov methods to stability of linear and nonlinear, continuous time systems.	7 hrs	20%
END SEMESTER EXAM			

QUESTION PAPER PATTERN:

Maximum Marks: 100 Exam Duration: 3Hourrs.

Part A: 8 compulsory questions.

One question from each module of Modules I - IV; and two each from Module V & VI.

Student has to answer all questions. (8 x5)=40

Part B: 3 questions uniformly covering Modules I & II. Student has to answer any 2 from the 3 questions: (2 x 10) =20. Each question can have maximum of 4 sub questions (a,b,c,d), if needed.

Part C: 3 questions uniformly covering Modules III & IV. Student has to answer any 2 from the 3 questions: (2 x 10) =20. Each question can have maximum of 4 sub questions (a,b,c,d), if needed.

Part D: 3 questions uniformly covering Modules V & VI. Student has to answer any 2 from the 3 questions: (2 x 10) =20. Each question can have maximum of 4 sub questions (a,b,c,d), if needed.

NEHRU COLLEGE OF ENGINEERING & RESEARCH CENTRE THIRUVILWAMALA THRISSUR DT

PRINCIPAL
Nehru College of
Engineering and Research Centre
Pampady Thiruvilwamala Thrissur Dt
Pin 680 597 Kerala

Course code	Course Name	L-T-P -Credits	Year of Introduction
EE305	Power Electronics	3-0-0-3	2016

Prerequisite: Nil

Course Objectives

- To get an overview of different types of power semiconductor devices and their switching characteristics
- To study the operation and characteristics of various types of power electronic converters

Syllabus :

Structure and characteristics of various power semiconductor devices – turn-on methods – controlled rectifiers – inverters – AC voltage controllers – cycloconverters – DC choppers and switching regulators

Expected outcome.

The students who successfully complete this course will be able to:

i. Choose appropriate power semiconductor device in converter circuits and develop their triggering circuits.
ii. Analyze various types of power electronic converters and apply different switching techniques.
iii. Select appropriate power converter for specific applications.
iv. Interpret and use datasheets of power semiconductor devices for design.

Text Book:

Muhammad H. Rashid, *Power Electronics Circuits, Devices and Applications*, Pearson Education

References:

1. Mohan N., T. M. Undeland and W. P. Robbins., Power Electronics, Converters, Applications & Design, Wiley-India
2. Krein P. T., Elements of Power Electronics, Oxford University Press, 1998.
3. P.S. Bimbhra, Power Electronics, Khanna Publishers, New Delhi
4. L. Umanand, Power Electronics – Essentials & Applications, Wiley-India
5. Singh M. D. and K. B. Khanchandani, *Power Electronics*, Tata McGraw Hill, New Delhi, 2008.

Course Plan

Module	Contents	Hours	Sem. Exam Marks
I	SCR-Structure, static characteristics & switching (turn-on & turn-off) characteristics - di/dt & dv/dt protection – turn-on methods of SCR - two transistor analogy - series and parallel connection of SCRs Structure and principle of operation of power diode, TRIAC, GTO, Power MOSFET & IGBT – Comparison	6	15%
II	**Gate triggering circuits** – R, RC, UJT triggering circuits – natural and forced commutation (concept only). Requirements of isolation and synchronisation in gate drive circuits- Opto and pulse transformer based isolation. **Controlled rectifiers** – half-wave controlled rectifier with R load – 1-phase fully controlled bridge rectifier with R, RL and RLE loads (continuous & discontinuous conduction) – output voltage	8	15%

NEHRU COLLEGE OF ENGINEERING & RESEARCH CENTRE
PRINCIPAL
Nehru College of
Engineering and Research Centre
Pampady Thiruvilwamala Thrissur Dt
Pin 680 597

	equation – 1-phase half controlled bridge rectifier with R, RL and RLE loads – displacement power factor – distortion factor.		
FIRST INTERNAL EXAMINATION			
III	3-phase half-wave controlled rectifier with R load – 3-phase fully controlled & half-controlled converter with RLE load (continuous conduction, ripple free) – output voltage equation-waveforms for various triggering angles (no analysis) – 1-phase & 3-phase dual converter with & without circulating current – four-quadrant operation	7	15%
IV	**Inverters** – voltage source inverters– 1-phase half-bridge & full bridge inverter with R & RL loads – THD in output voltage – 3-phase bridge inverter with R load – 120° & 180° conduction mode – current source inverters.	7	15%
SECOND INTERNAL EXAMINATION			
V	**Voltage control in inverters** – Pulse Width Modulation – single pulse width, multiple pulse width & sine PWM – modulation index & frequency modulation ratio. **AC voltage controllers** (ACVC) – 1-phase full-wave ACVC with R, & RL loads – waveforms – RMS output voltage, input power factor with R load – sequence control (two stage) with R load	7	20%
VI	**DC-DC converters** – step down and step up choppers – single-quadrant, two-quadrant & four quadrant chopper – pulse width modulation & current limit control in dc-dc converters. Switching regulators – buck, boost & buck-boost - continuous conduction mode only – waveforms – design of filter inductance & capacitance	7	20%
END SEMESTER EXAM			

QUESTION PAPER PATTERN:

Maximum Marks: 100 Exam Duration: 3Hourrs.

Part A: 8 compulsory questions.

One question from each module of Module I - IV; and two each from Module V & VI.

Student has to answer all questions. (8 x5)=40

Part B: 3 questions uniformly covering Modules I & II. Student has to answer any 2 from the 3 questions: (2 x 10) =20. Each question can have maximum of 4 sub questions (a,b,c,d), if needed.

Part C: 3 questions uniformly covering Modules III & IV. Student has to answer any 2 from the 3 questions: (2 x 10) =20. Each question can have maximum of 4 sub questions (a,b,c,d), if needed.

Part D: 3 questions uniformly covering Modules V & VI. Student has to answer any 2 from the 3 questions: (2 x 10) =20. Each question can have maximum of 4 sub questions (a,b,c,d), if needed.

NEHRU COLLEGE OF ENGINEERING & RESEARCH CENTRE

PRINCIPAL
Nehru College of
Engineering and Research Centre
Pampady Thiruvilwamala Thrissur Dt

Course code	Course Name	L-T-P - Credits	Year of Introduction
EE306	POWER SYSTEM ANALYSIS	3-0-0-3	2016

Prerequisite: Nil

Course Objectives

- To enable the students to analyse power systems under normal and abnormal conditions.
- To understand the need for load flow analysis and different methods
- To understand power system modeling
- To understand the need for stability studies and their analysis

Syllabus

Per unit quantities - modeling of power system components - methods of analyzing faults in symmetrical and unsymmetrical case - load flow studies - Automatic Generation Control - Automatic voltage control – Economic load dispatch - Unit commitment - Power system stability - Solution of swing equation - Methods of improving stability limits

Expected outcome .

The students will be able to:

i. Analyse power systems under normal and abnormal conditions.

ii. Carry out load flow studies under normal and abnormal conditions

References:

1. Cotton H. and H. Barber, Transmission & Distribution of Electrical Energy, 3/e, Hodder and Stoughton, 1978.
2. Gupta B. R., *Power System Analysis and Design*, S. Chand, New Delhi, 2006.
3. Gupta J.B., Transmission & *Distribution of Electrical Power*, S.K. Kataria & Sons, 2009.
4. Hadi Saadat, *Power System Analysis*, 2/e, McGraw Hill, 2002.
5. Kothari D. P. and I. J. Nagrath, *Modern Power System Analysis*, 2/e, TMH, 2009.
6. Kundur P., *Power system Stability and Control*, McGraw Hill, 199
7. Soni, M.L., P. V. Gupta and U. S. Bhatnagar, *A Course in Electrical Power*, Dhanpat Rai & Sons, New Delhi, 1984.
8. Stevenson W. D., *Elements of Power System Analysis*, 4/e, McGraw Hill, 1982.
9. Uppal S. L. and S. Rao, *Electrical Power Systems*, Khanna Publishers, 2009.
10. Wadhwa C. L., *Electrical Power Systems*, 33/e, New Age International, 2004.
11. Weedy B. M., B. J. Cory, N. Jenkins, J. B. Ekanayake and G. Strbac, *Electric Power System*, John Wiley & Sons, 2012.

Course Plan

Module	Contents	Hours	Sem. Exam Marks
I	Per unit quantities-single phase and three phase-selection of base quantities -advantages of per unit system –changing the base of per unit quantities-Simple problems.	2	15%
	Modelling of power system components - single line diagram – per unit quantities. Symmetrical components- sequence impedances and sequence networks of generators, transformers and transmission lines.	3	
II	Methods of analyzing faults in symmetrical and unsymmetrical cases, effects of faults - Power system faults - symmetrical faults - short circuit MVA - current limiting reactors-	8	15%

NEHRU COLLEGE OF ENGINEERING & RESEARCH CENTRE
THIRUVILWAMALA, THRISSUR-DT

PRINCIPAL
Nehru College of
Engineering and Research Centre
Pampady, Thiruvilwamala, Thrissur Dt

	Unsymmetrical faults - single line to ground, line to line, double line to ground faults -consideration of prefault current-problems.		
FIRST INTERNAL EXAMINATION			
III	Load flow studies – Introduction-types-network model formulation - formation of bus impedance and admittance matrix, Gauss-Siedel (two iterations), Newton-Raphson (Qualitative analysis only) and Fast Decoupled method (two iterations) - principle of DC load flow.	8	15%
IV	Automatic Generation Control: Load frequency control: single area and two area systems - Automatic voltage control.	6	15%
SECOND INTERNAL EXAMINATION			
V	Economic Operation - Distribution of load between units within a plant - transmission loss as a function of plant generation - distribution of load between plants - Method of computing penalty factors and loss coefficients.	5	20%
	Unit commitment: Introduction — Constraints on unit commitments: Spinning reserve, Thermal unit constraints-Hydro constraints. -	2	
VI	Power system stability - steady state, dynamic and transient stability-power angle curve-steady state stability limit	3	20%
	Mechanics of angular motion-Swing equation – Solution of swing equation - Point by Point method - RK method - Equal area criterion application - Methods of improving stability limits.	5	
END SEMESTER EXAM			

QUESTION PAPER PATTERN:

Maximum Marks: 100 Exam Duration: 3Hourrs.

Part A: 8 compulsory questions.

One question from each module of Modules I - IV; and two each from Module V & VI.

Student has to answer all questions. (8 x5)=40

Part B: 3 questions uniformly covering Modules I & II. Student has to answer any 2 from the 3 questions: (2 x 10) =20. Each question can have maximum of 4 sub questions (a,b,c,d), if needed.

Part C: 3 questions uniformly covering Modules III & IV. Student has to answer any 2 from the 3 questions: (2 x 10) =20. Each question can have maximum of 4 sub questions (a,b,c,d), if needed.

Part D: 3 questions uniformly covering Modules V & VI. Student has to answer any 2 from the 3 questions: (2 x 10) =20. Each question can have maximum of 4 sub questions (a,b,c,d), if needed.

NEHRU COLLEGE OF ENGINEERING & RESEARCH CENTRE Pampady Thiruvilwamala Thrissur-Dt

PRINCIPAL
Nehru College of
Engineering and Research Centre
Pampady Thiruvilwamala Thrissur Dt
Pin 680 597

Course code	Course Name	L-T-P - Credits	Year of Introduction
EE307	SIGNAL AND SYSTEMS	3-0-0-3	2016

Prerequisite: Nil

Course Objectives

- To impart knowledge about the representation and properties of signal and systems and applications in engineering

Syllabus:

Classification of signals - Basic operations on signals- properties of systems- Convolution- Laplace transform-applications-Fourier series and Fourier transforms- properties- Discrete time systems-sampling- ZT-properties-applications- DFS-DFT-properties-Basics of Nonlinear systems

Expected Outcome:

After the completion of the course student will be able to:

i. Represent various signals and systems
ii. Analyse the continuous time system with Laplace transform
iii. Represent and analyse signals using Fourier representation
iv. Analyse the discrete time system using ZT
v. Analyse the DT systems with DFS
vi. Acquire basic knowledge in nonlinear systems

Text books:

1. Haykin S. & Veen B.V., Signals & Systems, John Wiley
2. Oppenheim A.V., Willsky A.S. & Nawab S.H., Signals and Systems, Tata McGraw Hill
3. Signals and Systems: I J Nagrarth- Tata McGraw Hill

References:

1. Bracewell R.N., Fourier Transform & Its Applications, McGraw Hill
2. Farooq Husain , Signals and Systems, Umesh pub.
3. Papoulis A., Fourier Integral & Its Applications, McGraw Hill
4. Taylor F.H., Principles of Signals & Systems, McGraw Hill

Course Plan

Module	Contents	Hours	Sem. Exam Marks
I	Introduction to signals and systems - Classification of signals - Basic operations on signals – Elementary signals – Concept of system - Properties of systems - Stability, inevitability- time invariance- Linearity -Causality – Memory- Convolution- Impulse response- Representation of LTI systems - Differential equation representations of LTI systems	7	15%
II	Laplace transform analysis of systems - Relation between the transfer function and differential equation –Causality and stability - Inverse system - Determining the time domain and frequency response from poles and zeros	7	15%
FIRST INTERNAL EXAMINATION			
III	Fourier representation of continuous time signals –Fourier	7	15%

NEHRU COLLEGE OF ENGINEERING & RESEARCH CENTRE PANPADY THIRUVILWAMALA THRISSUR-DT

PRINCIPAL
Nehru College of
Engineering and Research Centre
Panipady Thiruvilwamala

	Series-Harmonic analysis of common signals- Fourier transform - Existence –properties of FT- Energy spectral density and power spectral density - Frequency response of LTI systems -		
IV	Sampled data systems- Sampling process-sampling theorem-signal re construction- Zero order and First order hold circuits- Difference equation representations of LTI systems - Discrete form of special functions- Discrete convolution and its properties	7	15%
SECOND INTERNAL EXAMINATION			
V	Z Transform - Region of convergence- Properties of the Z transform – Inverse ZT-methods Z-transfer function- Analysis of difference equation of LTI systems – Basic idea on Stability and causality conditions-	7	20%
VI	Fourier representation of discrete time signals - Discrete Fourier series–properties- Frequency response of simple DT systems Basics of Non linear systems-types and properties Introduction to random signals and processes (concepts only)	7	20%
END SEMESTER EXAM			

QUESTION PAPER PATTERN:

Maximum Marks: 100 Exam Duration: 3Hourrs.

Part A: 8 compulsory questions.

One question from each module of Module I - IV; and two each from Module V & VI.

Student has to answer all questions. (8 x5)=40

Part B: 3 questions uniformly covering Modules I & II. Student has to answer any 2 from the 3 questions: (2 x 10) =20. Each question can have maximum of 4 sub questions (a,b,c,d), if needed.

Part C: 3 questions uniformly covering Modules III & IV. Student has to answer any 2 from the 3 questions: (2 x 10) =20. Each question can have maximum of 4 sub questions (a,b,c,d), if needed.

Part D: 3 questions uniformly covering Modules V & VI. Student has to answer any 2 from the 3 questions: (2 x 10) =20. Each question can have maximum of 4 sub questions (a,b,c,d), if needed.

NEHRU COLLEGE OF ENGINEERING & RESEARCH CENTRE THIRUVILWAMALA, THRISSUR-DT

PRINCIPAL
Nehru College of
Engineering and Research Centre
Pampady, Thiruvilwamala, Thrissur Dt
Pin 680 597 Kerala

Course code	Course Name	L-T-P-Credits	Year of Introduction
EE308	Electric Drives	3-0-0-3	2016

Prerequisite: EE202 & EE205

Course Objectives

- To provide fundamental knowledge in dynamics and control of Electric Drives.
- To justify the selection of Drives for various applications.
- To familiarize the various semiconductor controlled drives employing various motors.

Syllabus

Fundamentals of dynamics and control of electric drives– separately excited dc motor drives using controlled rectifiers — chopper controlled dc drives – ac voltage controllers – three phase induction motor speed control – VSI and CSI fed induction motor drives – synchronous motor drives

Expected outcome.

The students will be able to select a drive for a particular application. They will familiarize with the various control techniques employed for controlling drives with ac and dc motors.

Text books

1. Bimal K. Bose "Modern power electronics and AC drives" Pearson Education, Asia 2003
2. Dubey G. K. "Power semiconductor control drives" Prentice Hall, Englewood Cliffs, New Jersey, 1989

References:

1. Dewan S.B. , G. R. Slemon, A. Strauvhen, "Power semiconductor drives", John Wiley and sons
2. Dr. P. S. Bimbra "Power electronics", Khanna publishers
3. J. M. D. Murphy "Thyristor control of AC drives"
4. N. K. De, P. K. Sen "Electric drives" Prentice Hall of India 2002
5. Ned Mohan, Tore m Undeland, William P Robbins, "Power electronics converters applications and design", John Wiley and Sons.
6. Pillai S. K. "A first course on electric drives", Wieley Eastern Ltd, New Delhi
7. Vedam Subrahmanyam, "Electric Drives", MC Graw Hill Education, New Delhi
8. W. Shepherd, L. N. Hulley and D. T. Liang, "Power Electronocs and motor control", Second Edition, Cambridge University Press, 1995.

Course Plan

Module	Contents	Hours	Sem. Exam Marks
I	Introduction to electric drives – Block diagram – advantages of electric drives – Dynamics of motor load system, fundamental equations, and types of load – classification of load torque, four quadrant operation of drives. Steady state stability. Introduction to closed loop control of drives.	7	15%
II	DC motor drives- constant torque and constant power operation, separately excited dc motor drives using controlled rectifiers, single phase semi converter and single phase fully controlled converter drives. Three phase semi converter and fully controlled converter drives. Dual converters, applications of dual converter for speed control of DC motor. Closed loop control of separately excited dc motor drive. DC series motor drive for traction application.	7	15%
	FIRST INTERNAL EXAMINATION		

NEHRU COLLEGE OF ENGINEERING & RESEARCH CENTRE
Pampady
Thiruvilwamala
Thrissur Dt

PRINCIPAL
Nehru College of
Engineering and Research Centre
Pampady Thiruvilwamala Thrissur Dt
Pin - 680 597 Kerala

III	Chopper controlled DC drives. Analysis of single quadrant chopper drives. Regenerative braking control. Two quadrant chopper drives. Four quadrant chopper drives. Cycloconverters for drive applications – different types – basic principle.	7	15%
IV	Three phase induction motor speed control. Using semiconductor devices. Stator voltage control – stator frequency control - Stator voltage and frequency control (v/f). Rotor chopper speed control - slip power recovery control schemes – sub synchronous and super synchronous speed variations.	7	15%
SECOND INTERNAL EXAMINATION			
V	Voltage source inverter fed induction motor drives, Current source inverter fed induction motor drives. Concept of space vector – Basic transformation in reference frame theory – field orientation principle.	7	20%
VI	Synchronous motor drives – introduction to v/f control. Permanent Magnet synchronous motor drives – different types – control requirements, converter circuits, modes of operation. Microcontroller based permanent magnet synchronous motor drives (schematic only).	7	20%
END SEMESTER EXAM			

QUESTION PAPER PATTERN:

Maximum Marks: 100 Exam Duration: 3Hourrs.

Part A: 8 compulsory questions.

One question from each module of Modules I - IV; and two each from Module V & VI.

Student has to answer all questions. (8 x5)=40

Part B: 3 questions uniformly covering Modules I & II. Student has to answer any 2 from the 3 questions: (2 x 10) =20. Each question can have maximum of 4 sub questions (a,b,c,d), if needed.

Part C: 3 questions uniformly covering Modules III & IV. Student has to answer any 2 from the 3 questions: (2 x 10) =20. Each question can have maximum of 4 sub questions (a,b,c,d), if needed.

Part D: 3 questions uniformly covering Modules V & VI. Student has to answer any 2 from the 3 questions: (2 x 10) =20. Each question can have maximum of 4 sub questions (a,b,c,d), if needed.

NEHRU COLLEGE OF ENGINEERING & RESEARCH CENTRE
THIRUVILWAMALA, THRISSUR-DT

PRINCIPAL
Nehru College of
Engineering and Research Centre
Pampady, Thiruvilwamala, Thrissur Dt
Pin 680 597 Kerala

Course code	Course Name	L-T-P - Credits	Year of Introduction
EE367	New and Renewable Energy Systems	3-0-0-3	2016

Prerequisite: Nil

Course Objectives:

- To give sufficient knowledge about the promising new and renewable sources of energy
- To equip students in working with projects and to take up research work in connected areas.

Syllabus:

Solar energy - Solar radiation measurements - Applications of solar energy - Energy from oceans- Tidal energy - Wind energy -Small Hydro Power (SHP) Stations- Biomass and bio-fuels - geothermal energy -Power from satellite stations - Hydrogen energy.

Expected Outcome:

- The students will be able to design and analyse the performance of small isolated renewable energy sources.

References:

1. A.A.M. Saigh (Ed): Solar Energy Engineering, Academic Press, 1977
2. Abbasi S. A. and N. Abbasi, Renewable Energy Sources and Their Environmental Impact, Prentice Hall of India, 2001..
3. Boyle G. (ed.), Renewable Energy - Power for Sustainable Future, Oxford University Press, 1996
4. Earnest J. and T. Wizelius, Wind Power Plants and Project Development, PHI Learning, 2011.
5. F. Kreith and J.F. Kreider: Principles of Solar Engineering, McGraw Hill, 1978
6. G.N. Tiwari: Solar Energy-Fundamentals, Design, Modelling and Applications, Narosa Publishers, 2002
7. J.A. Duffie and W.A. Beckman: Solar Energy Thermal Processes, J. Wiley, 1994
8. Johansson T. B., H. Kelly, A. K. N. Reddy and R. H. Williams, Renewable Energy – Sources for Fuel and Electricity, Earth scan Publications, London, 1993.
9. Khan B. H., Non-Conventional Energy Resources, Tata McGraw Hill, 2009.
10. Rao S. and B. B. Parulekar, Energy Technology, Khanna Publishers, 1999.
11. Sab S. L., Renewable and Novel Energy Sources, MI. Publications, 1995.
12. Sawhney G. S., Non-Conventional Energy Resources, PHI Learning, 2012.
13. Tiwari G. N., Solar Energy- Fundamentals, Design, Modelling and Applications, CRC Press, 2002.

Course Plan

Module	Contents	Hours	Sem. Exam Marks
I	Introduction, Classification of Energy Resources; Conventional Energy Resources - Availability and their limitations; Non-Conventional Energy Resources – Classification, Advantages, Limitations; Comparison of Conventional and Non-Conventional Energy Resources; World Energy Scenario; Indian Energy Scenario. ENERGY STORAGE: Sizing and Necessity of Energy Storage.	5	15%
II	SOLAR THERMAL SYSTEMS: Introduction, Solar Constant, Basic Sun-Earth Angles, Measurement of Solar Radiation Data – Pyranometer and Pyrheliometer .Principle of Conversion of Solar Radiation into Heat, – Solar thermal collectors – General description	11	15%

NEHRU COLLEGE OF ENGINEERING & RESEARCH CENTRE PAMPADY THIRUVILWAMALA, THRISSUR DT.

PRINCIPAL
Nehru College of Engineering and Research Centre
Pampady, Thiruvilwamala, Thrissur Dt.
Pin 680 597 Kerala

	and characteristics – Flat plate collectors – Heat transfer processes – Solar concentrators (parabolic trough, parabolic dish, Central Tower Collector) –performance evaluation..		
FIRST INTERNAL EXAMINATION			
III	SOLAR ELECTRIC SYSTEMS: Solar Thermal Electric Power Generation –; Solar Photovoltaic – Solar Cell fundamentals, characteristics, classification, construction of module, panel and array. Solar PV Systems – stand-alone and grid connected; Applications – Street lighting, Domestic lighting and Solar Water pumping systems..	5	15%
IV	ENERGY FROM OCEAN: Tidal Energy – Principle of Tidal Power, Components of Tidal Power Plant (TPP), Classification of Tidal Power Plants, Advantages and Limitations of TPP. Ocean Thermal Energy Conversion (OTEC): Principle of OTEC system, Methods of OTEC power generation – Open Cycle (Claude cycle), Closed Cycle (Anderson cycle) and Hybrid cycle (block diagram description of OTEC); Site-selection criteria, Biofouling, Advantages & Limitations of OTEC.	7	15%
SECOND INTERNAL EXAMINATION			
V	WIND ENERGY: Introduction, Wind and its Properties, History of Wind Energy, Wind Energy Scenario – World and India. Basic principles of Wind Energy Conversion Systems (WECS), Classification of WECS, Parts of WECS, Derivation for Power in the wind, Electrical Power Output and Capacity Factor of WECS, Advantages and Disadvantages of WECS	7	20%
VI	BIOMASS ENERGY: Introduction, Photosynthesis process, Biomass fuels, Biomass conversion technologies, Urban waste to Energy Conversion, Biomass Gasification, Biomass to Ethanol Production, Biogas production from waste biomass, factors affecting biogas generation, types of biogas plants – KVIC and Janata model; Biomass program in India. Small hydro power: Classification as micro, mini and small hydro projects - Basic concepts and types of turbines - Design and selection considerations. EMERGING TECHNOLOGIES: Fuel Cell, Small Hydro Resources, Hydrogen Energy, alcohol energy, nuclear fusion and power from satellite stations.	7	20%
END SEMESTER EXAM			

QUESTION PAPER PATTERN:

Maximum Marks: 100 Exam Duration: 3Hourrs.

Part A: 8 compulsory questions. One question from each module of Module I - IV; and two each from Module V & VI. Student has to answer all questions. (8 x5)=40

Part B: 3 questions uniformly covering Modules I & II. Student has to answer any 2 from the 3 questions: (2 x 10) =20. Each question can have maximum of 4 sub questions (a,b,c,d), if needed.

Part C: 3 questions uniformly covering Modules III & IV. Student has to answer any 2 from the 3 questions: (2 x 10) =20. Each question can have maximum of 4 sub questions (a,b,c,d), if needed.

Part D: 3 questions uniformly covering Modules V & VI. Student has to answer any 2 from the 3 questions: (2x10) =20. Each question can have maximum of 4 sub questions (a,b,c,d), if needed.

NEHRU COLLEGE OF ENGINEERING & RESEARCH CENTRE PAMPADY THIRUVILWAMALA, THRISSUR DT.

PRINCIPAL
Nehru College of
Engineering and Research Centre
Pampady, Thiruvilwamala, Thrissur Dt
Pin - 680 597, Kerala

Course code	Course Name	L-T-P - Credits	Year of Introduction
EE402	Special Electrical Machines	3-0-0-3	2016

Prerequisite: Nil

Course Objectives

- To get an overview of some of the special machines for control and industrial applications

Syllabus

AC Servomotors – construction – operation - DC servomotors – Stepper motor – operation – types-modes of excitation – AC series motor – Universal motor – Hysteresis motor – Reluctance motor – Switched reluctance motor – Permanent magnet DC motor – Brushless DC motor – Linear motors – Linear induction motors.

Expected outcome.

- The students will gain knowledge in the construction and principle of operation of certain special electrical machines having various applications.

Text Book:

E. G. Janardhanan, '*Special Electrical Machines*' PHI Learning Private Limited.

References:

1. Irving L. Kosow.'*Electrical Machinery and Transformers*', Oxford Science Publications.
2. T. J. E. Miller, '*Brushless PM and Reluctance Motor Drives*'.C.Larendon Press, Oxford.
3. Theodore Wildi, '*Electric Machines, Drives and Power Systems*', Prentice Hall India Ltd.
4. Veinott & Martin,'*Fractional & Subfractional hp Electric Motors*'.McGraw Hill International Edn.

Course Plan

Module	Contents	Hours	Sem. Exam Marks
I	AC Servomotors- Construction-principle of operation – performance characteristics – damped AC servomotors – Drag cup servomotor – applications. DC servomotors – field and armature controlled DC servomotors – permanent magnet armature controlled – series split field DC servomotor.	7	15%
II	Stepper motors – Basic principle – different types – variable reluctance- permanent magnet – hybrid type – comparison – theory of operation – monofilar and bifilar windings – modes of excitation – drive circuits – static and dynamic characteristics – applications	7	15%
FIRST INTERNAL EXAMINATION			
III	Single phase special electrical machines – AC series motor-construction – principle of working – phasor diagram – universal motor Hysteresis motor- constructional details- principle of operation – torque-slip characteristics – applications.	7	15%
IV	Reluctance motors – principle of operation – torque equation – torque slip characteristics-applications. Switched reluctance motors – principle of operation – power converter circuits – torque equation – different types – comparison – applications.	7	15%

NEHRU COLLEGE OF ENGINEERING & RESEARCH CENTRE THIRUVILWAMALA THRISSUR-DT

PRINCIPAL
Nehru College of
Engineering and Research Centre
Pampady Thiruvilwamala Thrissur Dt
Pin 680 597 Kerala

SECOND INTERNAL EXAMINATION			
V	Permanent Magnet DC Motors – construction – principle of working. Brushless dc motor – construction – trapezoidal type-sinusoidal type – comparison – applications.	7	20%
VI	Linear motors – different types – linear reluctance motor – linear synchronous motors – construction – comparison. Linear induction motors – Expression for linear force – equivalent circuit – applications.	7	20%
END SEMESTER EXAM			

QUESTION PAPER PATTERN:

Maximum Marks: 100 Exam Duration: 3Hourrs.

Part A: 8 compulsory questions.

One question from each module of Modules I - IV; and two each from Module V & VI.

Student has to answer all questions. (8 x5)=40

Part B: 3 questions uniformly covering Modules I & II. Student has to answer any 2 from the 3 questions: (2 x 10) =20. Each question can have maximum of 4 sub questions (a,b,c,d), if needed.

Part C: 3 questions uniformly covering Modules III & IV. Student has to answer any 2 from the 3 questions: (2 x 10) =20. Each question can have maximum of 4 sub questions (a,b,c,d), if needed.

Part D: 3 questions uniformly covering Modules V & VI. Student has to answer any 2 from the 3 questions: (2 x 10) =20. Each question can have maximum of 4 sub questions (a,b,c,d), if needed.

NEHRU COLLEGE OF ENGINEERING AND RESEARCH CENTRE
PAMPADY
THIRUVILWAMALA,
THRISSUR DT.

PRINCIPAL
Nehru College of
Engineering and Research Centre
Pampady, Thiruvilwamala, Thrissur Dt
Pin - 680 661, Kerala

COURSE CODE	COURSE NAME	L-T-P-CREDITS	YEAR OF INTRODUCTION
EE403	DISTRIBUTED GENERATION AND SMART GRIDS	3-0-0-3	2016

Prerequisite: Nil

Course objective.

- To develop a conceptual introduction to various distributed generation systems, micro grids, smart grids and their control

Syllabus:

Introduction to distributed generation and smart grids - Distributed Energy Resources – Micro Grids and their control – Protection issues for Microgrids - Smart Grids: Components – NIST Reference architecture – Smart meters - Wide Area Measurement System (WAMS), Phase Measurement Unit (PMU) - demand response- Demand Side Management - Smart Substations, HAN, NAN, SANET, Cloud computing in smart grid – Power Quality issues with smart grid

Expected Outcome:

The students will be able to:

i. Explain various distributed generation systems
ii. Understand the microgrids and their control schemes
iii. Understand various developments happening in the field of Smart Grids.

TEXT BOOKS/REFERENCES:

1. Ali Keyhani, Design of Smart Power Grid Renewable Energy Systems, ISBN: 978-0-470-62761-7, Wiley
2. James Momoh, Smart Grid: Fundamentals of Design and Analysis, ISBN: 978-0-470-88939-8, Wiley
3. R. C. Durgan, M. F. Me Granaghen, H. W. Beaty, "Electrical Power System Quality", McGraw-Hill
4. Remus Teodorescu, Marco Liserre, Pedro Rodriguez, Grid Converters for Photovoltaic and Wind Power Systems, ISBN: 978-0-470-05751-3, Wiley
5. S. Chowdhury, S.P. Chowdhury and P. Crossley, Microgrids and Active Distribution Networks, ISBN 978-1-84919-014-5, IET, 2009

COURSE PLAN

Module	Contents	Hours	End. Sem. Exam. Marks
I	Distributed generation – Introduction - Integration of distributed generation to Grid – Concepts of Micro Grid - Typical Microgrid configurations - AC and DC micro grids - Interconnection of Microgrids - Technical and economical advantages of Microgrid -	7	15%

PRINCIPAL
Nehru College of
Engineering and Research Centre
Pampady Thiruvilwamala

	Challenges and disadvantages of Microgrid development Smart Grid: Evolution of Electric Grid - Definitions and Need for Smart Grid, Opportunities, challenges and benefits of Smart Grids		
II	Distributed energy resources: Introduction - Combined heat and power (CHP) systems - Solar photovoltaic (PV) systems – Wind energy conversion systems (WECS) - Small-scale hydroelectric power generation - Storage devices: Batteries: Lead acid, nickel metal hydrate, and lithium ion batteries , ultra-capacitors, flywheels Control of Microgrids: Introduction to Central Controller (CC) and Microsource Controllers (MCs) - Control functions for microsource controller, Active and reactive power control, Voltage control, Storage requirement for fast load tracking, Load sharing through power-frequency control	6	15%
III	Protection issues for Microgrids: Introduction, Islanding, Different islanding scenarios, Major protection issues of stand-alone Microgrid - Impact of DG integration on electricity market, environment, distribution system, communication standards and protocols. Smart Grid: Components – NIST Smart Grid Reference Architecture Introduction to Smart Meters, Electricity tariff – one part tariff, two tariff and maximum demand tariff - Dynamic pricing: time-of-use (TOU) pricing, critical-peak pricing (CPP) and Real Time Pricing- Automatic Meter Reading(AMR), Plug in Hybrid Electric Vehicles(PHEV), Vehicle to Grid, Smart Sensors, Home & Building Automation. Intelligent Electronic Devices (IED) and their application for monitoring & protection, Wide Area Measurement System (WAMS), Phase Measurement Unit (PMU).	7	15%
IV	Smart energy efficient end use devices-Smart distributed energy resources- Load Curves-Load Shaping Objectives-Methodologies - Peak load shaving - Energy management-Role of technology in demand response- Demand Side Management – Numerical Problems	7	15%
V	Advanced Metering Infrastructure (AMI), Home Area Network (HAN), Neighborhood-Area Networks (NANs), Sensor and Actuator Networks (SANETs) Smart Substations, Substation Automation, IEC 61850 Substation Architecture, Feeder Automation.	7	20%

PRINCIPAL
Nehru College of
Engineering and Research Centre
Pampady, Thiruvilwamala, Thrissur
Pin 680 597 Kerala

VI	Cloud computing in smart grid: Private, public and Hybrid cloud. Cloud architecture of smart grid. Power quality: Introduction - Types of power quality disturbances - Voltage sag (or dip), transients, short duration voltage variation, Long duration voltage variation, voltage imbalance, waveform distortion, and voltage flicker - Harmonic sources: SMPS, Three phase power converters, arcing devices, saturable devices, fluorescent lamps, harmonic indices (THD, TIF, DIN, C – message weights) Power quality aspects with smart grids.	8	20%

QUESTION PAPER PATTERN:

Maximum Marks: 100 Exam Duration: 3Hourrs.

Part A: 8 compulsory questions.

One question from each module of Modules I - IV; and two each from Module V & VI.

Student has to answer all questions. (8 x5)=40

Part B: 3 questions uniformly covering Modules I & II. Student has to answer any 2 from the 3 questions: (2 x 10) =20. Each question can have maximum of 4 sub questions (a,b,c,d), if needed.

Part C: 3 questions uniformly covering Modules III & IV. Student has to answer any 2 from the 3 questions: (2 x 10) =20. Each question can have maximum of 4 sub questions (a,b,c,d), if needed.

Part D: 3 questions uniformly covering Modules V & VI. Student has to answer any 2 from the 3 questions: (2 x 10) =20. Each question can have maximum of 4 sub questions (a,b,c,d), if needed.

PRINCIPAL
Nehru College of
Engineering and Research Centre
Pampady, Thiruvilwamala, Thrissur Dt
Pin 680 597 Kerala

Course code	Course Name	L-T-P - Credits	Year of Introduction
EE405	**Electrical System Design**	**3-1-0-4**	**2016**

Prerequisite: Nil

Course Objectives

- To make aware of the Acts and Rules regulating the design of electrical .systems in India.
- To impart knowledge in the design of low voltage and medium voltage electrical installations.
- To give basic knowledge of design of distribution transformer substations, their installations and earthing design for transformer substations
- To familiarise lighting calculations and external lighting.

Syllabus

Electrical system design practices – general awareness of IS Codes, Electricity Acts & Rules, NEC etc. Domestic Installations, Industrial Installations and 11 kV substations. Design features of Recreational buildings and High-rise building. Selection of Standby generators and their Installations. Underground cable installations and their accessories. Design features of external lighting, lightning protection and special requirements for lifts and fire fighting equipments.

Expected outcome

The students will be able to

i. Know the basic Rules and Regulations of electrical systems design.
ii. Design simple electrical systems and prepare the schematic diagram with all the specifications.

Text Books

1. J. B. Gupta, A Course in Electrical Installation Estimating and Costing, S.K. Kataria & Sons; Reprint 2013 edition (2013).
2. K. B. Raina, S. K. Bhattacharya, Electrical Design Estimating Costing, NEW AGE; Reprint edition (2010).
3. M. K. Giridharan, Electrical Systems Design, , I K International Publishers, New Delhi, 2nd edition, 2016

Data Book (Approved for use in the examination):

1. M K Giridharan, Electrical Systems Design Data Hand book, I K International Publishers, New Delhi, 2011
2. N. Rajendran, Electrical System Design Data Book

References:

1. National Electric Code, Bureau of Indian Standards publications, 2011.
2. Relevant Indian Standard – specifications (IS – 732, IS – 746, IS – 3043, IS – 900), etc.
3. S. L. Uppal, Electrical Wiring Estimating & Costing, Khanna Publishers, 2008

Course Plan

Module	Contents	Hours	Sem. Exam Marks
I	General awareness of IS Codes (IS 3043, IS 732, IS 2675, IS 5216-P12, IS 2309), The Indian Electricity Act 2003, National Electric Code (NEC **2011**) - scope and safety aspects applicable to low and medium (domestic) voltage installations, Electric services in buildings, Classification of voltages, standards and specifications.	8	15%

NEHRU COLLEGE OF ENGINEERING & RESEARCH CENTRE THIRUVILWAMALA THRISSUR DT.

PRINCIPAL
Nehru College of
Engineering and Research Centre
Pampady, Thiruvilwamala, Thrissur Dt
Pin - 680 597, Kerala

II	General aspects of the design of electrical installations for domestic dwellings as per NEC guidelines (low and medium voltage installations)–connected load calculation, sub circuit determination, selection of main distribution board, sub distribution board, MCB, ELCB, MCCB and cables for sub circuits. Pre-commissioning tests of domestic installations.	10	15%
FIRST INTERNAL EXAMINATION			
III	Industrial installations –classifications- Design of distribution systems with light power and motor loads for small and medium industries. Selection of transformer substations, switchgears and protective devices – Design of indoor and outdoor 11 kV substations up to 630 kVA.	10	15%
IV	Short circuit calculations and Design of earthing for 11 kV substation of capacity up to 630 kVA. Pre-commissioning tests of cables and transformers.	8	15%
SECOND INTERNAL EXAMINATION			
V	Design of illumination systems – Average lumen method- lighting design calculations using Coefficient of utilisation (CU) and light loss factor (LLF) - classification and selection of luminaires. Exterior lighting design- road lighting and area lighting. Design requirements for high rise buildings and recreational buildings.	8	20%
VI	Energy conservation techniques in lighting and power. Selection of standby generator –power rating - Continuous, prime power and standby power, installation and its protection, Introduction to Automatic Main Failure (AMF) System. Introduction to Solar PV systems for domestic applications. Simple design projects.	10	20%
END SEMESTER EXAMINATION			

QUESTION PAPER PATTERN (End semester exam)

Maximum Marks: 100 Exam Duration: 3 Hourrs.

(Approved data handbook to be permitted inside examination hall)

Part A: Eight compulsory questions. One question from each module of Modules I - IV; and two each from Module V & VI. Student has to answer all questions. (8 x5) = 40

Part B: Three questions uniformly covering Modules I & II. Student has to answer any 2 from the 3 questions: (2 x 10) = 20. Each question can have maximum of 4 sub questions (a, b, c, d), if needed.

Part C: Three questions uniformly covering Modules III & IV. Student has to answer any 2 from the 3 questions: (2 x 10) = 20. Each question can have maximum of 4 sub questions (a, b, c, d), if needed.

Part D: Three questions uniformly covering Modules V & VI. Student has to answer any 2 from the 3 questions: (2 x 10) = 20. Each question can have maximum of 4 sub questions (a, b, c, d), if needed.

PRINCIPAL
Nehru College of
Engineering and Research Centre
Pampady Thiruvilwamala Thrissur Dt
Pin 680 597 Kerala

Course code.	Course Name	L-T-P - Credits	Year of Introduction
EE407	DIGITAL SIGNAL PROCESSING	3-0-0-3	2016

Prerequisite : Nil

Course Objectives

- To impart knowledge about digital signal processing and its applications in engineering

Syllabus

Introduction to signals and systems – Discrete Fourier Transforms – Fast Fourier Transforms - Introduction to FIR and IIR systems - FIR filter design - Finite word length effects in digital Filters - Introduction to FDA Toolbox in MATLAB - Introduction to TMS320 Family - Design & Implementation and Filter Structures - Introduction to Code Composer Studio

Expected outcome .

The students will be able to:

i. Analyse DT systems with DFT
ii. Design digital filters IIR and FIR filters
iii. Analyse finite word length effects in signal processing
iv. Design filters using Matlab FDA tool box
v. Understand Digital Signal Controllers and their Applications

Text Books:

1. Alan V.Oppenheim, Ronald W. Schafer & Hohn. R.Back, "Discrete Time Signal Processing", Pearson Education, 2nd edition, 2005.
2. Emmanuel.C..Ifeachor, & Barrie.W.Jervis, "Digital Signal Processing", Second editi on, Pearson Education / Prentice Hall, 2002.
3. John G. Proakis & Dimitris G.Manolakis, "Digital Signal Processing Principles, Algorithms &Applications", Fourth edition, Pearson education / Prentice Hall, 2007

References:

1. Johny R. Johnson, Introduction to Digital Signal Processing, PHI, 2006.
2. P.P.Vaidyanathan, Multirate Systems & Filter Banks, Prentice Hall, Englewood cliffs, NJ, 1993.
3. S.K. Mitra, Digital Signal Processing, A Computer Based approach, Tata Mc GrawHill, 1998.

Course Plan

Module	Contents	Hours	Sem. Exam Marks
I	Introduction to signals and systems - Discrete Fourier transform: Frequency domain sampling, Discrete Fourier transform (DFT): DFT pair, properties of DFT, frequency response analysis of signals using the DFT, circular convolution using DFT , linear filtering based on DFT Fast Fourier transform (FFT); Introduction, Radix -2 decimation in time FFT algorithm, Radix-2 decimation in frequency algorithm.	7	15%
II	Introduction to FIR and IIR systems : Structures for realization of discrete time systems – structures for FIR and IIR systems – signal flow graphs, direct-form, cascade-form, parallel form, lattice and transposed structures and linear Phase FIR filters.	7	15%
	FIRST INTERNAL EXAMINATION		
III	Design of digital filters – general considerations – causality and its	7	15%

NEHRU COLLEGE OF ENGINEERING & RESEARCH CENTRE
Pampady
Thiruvilwamala
Thrissur Dt

PRINCIPAL
Nehru College of
Engineering and Research Centre
Pampady, Thiruvilwamala, Thrissur Dt
Pin 680 597 Kerala

	implications, characteristics of practical frequency selective filters IIR filter design : Discrete time IIR filter (Butterworth and Chebyshev) from analog filter – IIR filter (LPF, HPF, BPF, BRF) design by Impulse Invariance, Bilinear transfor mation, Approximation of derivatives. filter design		
IV	FIR filter design : Structures of FIR filter- Linear phase FIR filter – Filter design using windowing techniques, frequency sampling techniques	7	15%
SECOND INTERNAL EXAMINATION			
V	Finite word length effects in digital Filters : Fixed point and floating point number representations - Comparison - Truncation and Rounding errors - Quantization noise - derivation for quantization noise power - coefficient quantization error - Product quantization error - Overflow error – Round-off noise power - limit cycle oscillations due to product round-off and overflow errors - signal scaling **Introduction to FDA Toolbox in MATLAB:** Design of filters using FDA toolbox (**Demo/Assignment only**)	7	20%
VI	Introduction to TMS320 Family: Architecture, Implementation, C24x CPU Internal Bus Structure, Memory Central Processing unit , Memory and I/O Spaces , Overview of Memory and I/O Spaces, Program control Address Modes System Configuration and Interrupts clocks and low Power Modes Digital input / output (I/O), Assembly language Instruction , Instruction Set summary , Instruction Description, Accumulator, arithmetic and logic Instruction , Auxiliary Register and data page Pointer Instructions , TREG, PREG, and Multiply Instruction ,Branch Instructions , Control Instructions I/O and Memory Instruction **Design & Implementation and Filter Structures:** MATLAB functions and TMS320 Implementation (**Demo/Assignment only**) **Introduction to Code Composer Studio (Demo only)**	7	20%
END SEMESTER EXAM			

QUESTION PAPER PATTERN:

Maximum Marks: 100 Exam Duration: 3Hourrs.

Part A: 8 compulsory questions.

One question from each module of Modules I - IV; and two each from Module V & VI.

Student has to answer all questions. (8 x5)=40

Part B: 3 questions uniformly covering Modules I & II. Student has to answer any 2 from the 3 questions: (2 x 10) =20. Each question can have maximum of 4 sub questions (a,b,c,d), if needed.

Part C: 3 questions uniformly covering Modules III & IV. Student has to answer any 2 from the 3 questions: (2 x 10) =20. Each question can have maximum of 4 sub questions (a,b,c,d), if needed.

Part D: 3 questions uniformly covering Modules V & VI. Student has to answer any 2 from the 3 questions: (2 x 10) =20. Each question can have maximum of 4 sub questions (a,b,c,d), if needed.

NEHRU COLLEGE OF ENGINEERING & RESEARCH CENTRE THIRUVILWAMALA, THRISSUR-DT

PRINCIPAL
Nehru College of
Engineering and Research Centre
Pampady Thiruvilwamala, Thrissur Dt
Pin 680 597 Kerala

Course code	Course Name	L-T-P - Credits	Year of Introduction
EE409	Electrical Machine Design	3-0-0-3	2016

Prerequisite: EE202 & EE205

Course Objectives

- To impart knowledge on principles of design of static and rotating electrical machines.
- To give a basic idea about computer aided design (CAD) and finite element method.

Syllabus

Machine design basic principles, Heating and cooling of electrical machines, Magnetic circuit design, Design of - Dc machine, Synchronous machine , Three phase induction motor, Computer aided design, Finite element method.

Expected outcome

- The students will be able to design transformers, DC machines, synchronous machines and induction motors

Text Book:

1. A K Sawhney, " A Course in Electrical Machine Design", Dhanpat rai *and* sons, Delhi.

References:

1. M. V. Deshpande, " Design and Testing of Electrical Machines", Wheeler Publishing.
2. R. K. Agarwal, " Principles of Electrical Machine Design", Essakay Publications, Delhi.
3. Ramamoorthy M, "Computer Aided Design of Electrical Equipment", East-West Press.
4. M. N. O. Sadiku, " Numerical techniques in Electromagnetics", CRC Press Edition-2001.

Course Plan

Module	Contents	Hours	Sem. Exam Marks
I	Principles of electrical machine design - General design considerations - specifications of machines - types of enclosures - types of ventilation - heating - short time rating - overload capacity - temperature rise time curve - hot spot rating. Magnetic circuit calculation - calculation of field ampere turns - air gap mmf - effect of slot and ventilating duct - active iron length - mmf for teeth - real and apparent flux densities - mmf per pole Magnetic Leakage Calculation- Effects of Leakage. Armature Leakage –Components. Unbalanced Magnetic Pull-Practical aspects of unbalanced magnetic pull	8	15%
II	Design of transformers - single phase and three phase transformers - distribution and power transformers - output equation - core design - window area - window space factor - overall dimensions of core. Windings – no. of turns - current density - conductor section - Cooling of transformers	6	15%
FIRST INTERNAL EXAMINATION			
III	Design of DC machines - output equation - specific loading - choice of speed and no of poles - calculation of main dimensions - choice of type of winding - number of slots - number of conductors per slot-current density - conductor section - slot insulation -	8	15%

NEHRU COLLEGE OF ENGINEERING & RESEARCH CENTRE THIRUVILWAMALA, THRISSUR DT

PRINCIPAL
Nehru College of
Engineering and Research Centre
Pampady, Thiruvilwamala, Thrissur Dt
Pin 680 597, Kerala

	length of air gap - design of field winding - conductor cross section - height of pole - design of inter pole - flux density under inter pole - calculation of turns of inter polar winding – design of compensating winding – brushes and commutators.		
IV	Design of synchronous machines - specific loading - output equation - main dimensions - types of winding - number of turns - number of slots and slot design - field design for water wheel and turbo alternators - cooling of alternators.	6	15%
SECOND INTERNAL EXAMINATION			
V	Design of three phase induction motors - main dimensions - stator design - squirrel cage and slip ring types - number of stator and rotor slots - rotor bar current - design of rotor bar - end ring current - design of end ring - design of slip ring rotor winding.	7	20%
VI	Introduction to computer aided design. Analysis and synthesis methods -hybrid techniques. Introduction to Finite element method - historical background, applications, advantages. Study of new computer aided machine software using Finite Element Case study: Complete design of an ac machine –steps.(Assignment only)	7	20%
END SEMESTER EXAM			

QUESTION PAPER PATTERN:

Maximum Marks: 100 Exam Duration: 3Hourrs.

Part A: 8 compulsory questions.

One question from each module of Modules I - IV; and two each from Module V & VI.

Student has to answer all questions. (8 x5)=40

Part B: 3 questions uniformly covering Modules I & II. Student has to answer any 2 from the 3 questions: (2 x 10) =20. Each question can have maximum of 4 sub questions (a,b,c,d), if needed.

Part C: 3 questions uniformly covering Modules III & IV. Student has to answer any 2 from the 3 questions: (2 x 10) =20. Each question can have maximum of 4 sub questions (a,b,c,d), if needed.

Part D: 3 questions uniformly covering Modules V & VI. Student has to answer any 2 from the 3 questions: (2 x 10) =20. Each question can have maximum of 4 sub questions (a,b,c,d), if needed.

NEHRU COLLEGE OF ENGINEERING & RESEARCH CENTRE THRISSUR

PRINCIPAL
Nehru College of
Engineering and Research Centre
Pampady Thiruvilwamala Thrissur Dt
Pin 680 597 Kerala

NEHRU COLLEGE OF ENGINEERING AND RESEARCH CENTRE
(NAAC Accredited)
(Approved by AICTE, Affiliated to APJ Abdul Kalam Technological University, Kerala)

Mechanical Engineering

Course No.	Course Name	L-T-P-Credits	Year of Introduction
ME201	MECHANICS OF SOLIDS	3-1-0-4	2016

Prerequisite: nil

Course Objectives:

1. To acquaint with the basic concepts of stress and deformation in solids.
2. To practice the methodologies to analyse stresses and strains in simple structural members, and to apply the results in simple design problems.

Syllabus

Analysis of deformable bodies : stress, strain, material behaviour, deformation in axially loaded bars, biaxial and triaxial deformation. Torsion of elastic circular members, design of shafts. Axial force, shear force and bending moment in beams. Stresses in beams: flexure and shear stress formulae, design of beams. Deflection of beams. Transformation equations for plane state of stress and strain, principal planes and stresses, Mohr's circle. Compound stresses: combined axial, flexural and shear loads – eccentric loading. Buckling: Euler's theory and Rankine's formula for columns.

Expected outcomes: At the end of the course students will be able to

1. Understand basic concepts of stress and strain in solids.
2. Determine the stresses in simple structural members such as shafts, beams, columns etc. and apply these results in simple design problems.
3. Determine principal planes and stresses, and apply the results to combined loading case.

Text Books:

1. Rattan, Strength of Materials, 2e McGraw Hill Education India, 2011
2. S.Jose, Sudhi Mary Kurian, Mechanics of Solids, Pentagon, 2015

References Books:

1. S. H. Crandal, N. C. Dhal, T. J. Lardner, An introduction to the Mechanics of Solids, McGraw Hill, 1999
2. R. C. Hibbeler, Mechanics of Materials, Pearson Education,2008
3. I.H. Shames, J. H. Pitarresi, Introduction to Solid Mechanics, Prentice Hall of India, 2006
4. James M.Gere, Stephen Timoshenko, Mechanics of Materials, CBS Publishers & Distributors, New Delhi,2012
5. F. Beer, E. R. Johnston, J. T. DeWolf, Mechanics of Materials, Tata McGraw Hill, 2011
6. A. Pytel, F. L. Singer, Strength of Materials, Harper & Row Publishers, New York,1998
7. E. P. Popov, T. A. Balan, Engineering Mechanics of Solids, Pearson Education, 2012
8. R. K. Bansal, Mechanics of solids, Laxmi Publications, 2004
9. P. N. Singh, P. K. Jha, Elementary Mechanics of Solids, Wiley Eastern Limited, 2012

NEHRU COLLEGE OF ENGINEERING & RESEARCH CENTRE PAMPADY THIRUVILWAMALA THRISSUR-DT.

PRINCIPAL
Nehru College of
Engineering and Research Centre
Pampady Thiruvilwamala Thrissur Dt
Pin 680 597 Kerala

Course Plan			
Module	**Contents**	**Hours**	**Sem. Exam Marks**
I	Introduction to analysis of deformable bodies – internal forces – method of sections – assumptions and limitations. Stress – stresses due to normal, shear and bearing loads – strength design of simple members. Definition of linear and shear strains.	3	15%
	Material behavior – uniaxial tension test – stress-strain diagrams concepts of orthotropy, anisotropy and inelastic behavior – Hooke's law for linearly elastic isotropic material under axial and shear deformation	3	
	Deformation in axially loaded bars – thermal effects – statically indeterminate problems – principle of superposition - elastic strain energy for uniaxial stress.	4	
II	Definition of stress and strain at a point (introduction to stress and strain tensors and its components only) – Poisson's ratio – biaxial and triaxial deformations – Bulk modulus - Relations between elastic	4	15%
	Torsion: Shafts - torsion theory of elastic circular bars – assumptions and limitations – polar modulus - torsional rigidity – economic cross-sections – statically indeterminate problems – shaft design for torsional load.	4	
FIRST INTERNAL EXAM			
III	Beams- classification - diagrammatic conventions for supports and loading - axial force, shear force and bending moment in a beam	2	15%
	Shear force and bending moment diagrams by direct approach	3	
	Differential equations between load, shear force and bending moment. Shear force and bending moment diagrams by summation approach – elastic curve – point of inflection.	5	
IV	Stresses in beams: Pure bending – flexure formula for beams assumptions and limitations – section modulus - flexural rigidity - economic sections – beam of uniform strength.	4	15%
	Shearing stress formula for beams – assumptions and limitations – design for flexure and shear.	4	
SECOND INTERNAL EXAM			
V	Deflection of beams: Moment-curvature relation – assumptions and limitations - double integration method – Macaulay's method - superposition techniques – moment area method and conjugate beam ideas for simple cases.	6	20%
	Transformation of stress and strains: Plane state of stress - equations of transformation - principal planes and stresses.	4	
VI	Mohr's circles of stress – plane state of strain – analogy between stress and strain transformation – strain rosettes	3	20%
	Compound stresses: Combined axial, flexural and shear loads – eccentric loading under tension/compression - combined bending and twisting loads.	4	

NEHRU COLLEGE OF ENGINEERING & RESEARCH CENTRE Pampady Thiruvilwamala Thrissur Dt

PRINCIPAL
Nehru College of
Engineering and Research Centre
Pampady Thiruvilwamala Thrissur Dt
Pin 680 597 Kerala

	Theory of columns: Buckling theory –Euler's formula for long columns – assumptions and limitations – effect of end conditions - slenderness ratio – Rankin's formula for intermediate columns.	3	
	END SEMESTER EXAM		

Question Paper Pattern

Total marks: 100, Time: 3 hrs

The question paper should consist of three parts

Part A

4 questions uniformly covering modules I and II. Each question carries 10 marks

Students will have to answer any three questions out of 4 (3X10 marks =30 marks)

Part B

4 questions uniformly covering modules III and IV. Each question carries 10 marks

Students will have to answer any three questions out of 4 (3X10 marks =30 marks)

Part C

6 questions uniformly covering modules V and VI. Each question carries 10 marks

Students will have to answer any four questions out of 6 (4X10 marks =40 marks)

Note: In all parts, each question can have a maximum of four sub questions, if needed.

NEHRU COLLEGE OF ENGINEERING & RESEARCH CENTRE
PAMPADY THIRUVILWAMALA THRISSUR-DT.

Estd. 2014

PRINCIPAL
Nehru College of
Engineering and Research Centre
Pampady Thiruvilwamala Thrissur Dt
Pin 680 597 Kerala

Course No.	Course Name	L-T-P-Credits	Year of Introduction
ME203	MECHANICS OF FLUIDS	3-1-0-4	2016

Prerequisite: nil

Course Objectives:

1. To study the mechanics of fluid motion.
2. To establish fundamental knowledge of basic fluid mechanics and address specific topics relevant to simple applications involving fluids
3. To familiarize students with the relevance of fluid dynamics to many engineering systems

Syllabus

Fluid Properties, Kinematics of fluid flow, Fluid Statics, Dynamics of fluid flow, Flow through pipes, Concept of Boundary Layer, Dimensional Analysis and Hydraulic similitude

Expected outcome: At the end of the course students will be able to

1. Calculate pressure variations in accelerating fluids using Euler's and Bernoulli's equations
2. Become conversant with the concepts of flow measurements and flow through pipes
3. Apply the momentum and energy equations to fluid flow problems.
4. Evaluate head loss in pipes and conduits.
5. Use dimensional analysis to design physical or numerical experiments and to apply dynamic similarity

Text Books:

1. Balachandran.P, Engineering Fluid Mechanics, PHI,2012
2. A S Saleem, Fluid Mechanics, Fathima Books,2016

References Books:

1. Cengel, Fluid Mechanics, McGraw Hill Education India 2014
2. Bansal R. K., A Textbook of Fluid Mechanics and Hydraulic Machines, Laxmi Publications, 2005
3. Modi P. N. and S. M. Seth, Hydraulics & Fluid Mechanics, S.B.H Publishers, New Delhi, 2002
4. Streeter V. L., E. B. Wylie and K. W. Bedford, Fluid Mechanics, Tata McGraw Hill, Delhi, 2010.
5. Joseph Karz, Introductory Fluid Mechanics, Cambridge University press,2010
6. Fox R. W. and A. T. McDonald, Introduction to Fluid dynamics, 5/e, John Wiley and Sons, 2009.
7. Shames I. H, Mechanics of Fluids, McGraw Hill, 1992.
8. White F.M., Fluid Mechanics, 6/e, Tata McGraw Hill, 2008

NEHRU COLLEGE OF ENGINEERING & RESEARCH CENTRE
THIRUVILWAMALA, THRISSUR DT.

PRINCIPAL
Nehru College of
Engineering and Research Centre
Pampady, Thiruvilwamala, Thrissur Dt
Pin 680 597 Kerala

Course Plan			
Module	**Contents**	**Hours**	**Sem. Exam Marks**
I	Introduction: Fluids and continuum, Physical properties of fluids, density, specific weight, vapour pressure, Newton's law of viscosity. Ideal and real fluids, Newtonian and non-Newtonian fluids. Fluid Statics- Pressure-density-height relationship, manometers, pressure on plane and curved surfaces, center of pressure, buoyancy, stability of immersed and floating bodies, fluid masses subjected to uniform accelerations, measurement of pressure.	8	15%
II	Kinematics of fluid flow: Eulerian and Lagrangian approaches, classification of fluid flow, 1-D, 2-D and 3-D flow, steady, unsteady, uniform, non-uniform, laminar, turbulent, rotational, irrotational flows, stream lines, path lines, streak lines, stream tubes, velocity and acceleration in fluid, circulation and vorticity, stream function and potential function, Laplace equation, equipotential lines flow nets, uses and limitations,	8	15%
FIRST INTERNAL EXAM			
III	Dynamics of Fluid flow: Fluid Dynamics: Energies in flowing fluid, head, pressure, dynamic, static and total head, Control volume analysis of mass, momentum and energy, Equations of fluid dynamics: Differential equations of mass, energy and momentum (Euler's equation), Navier-Stokes equations (without proof) in rectangular and cylindrical co-ordinates, Bernoulli's equation and its applications: Venturi and Orifice meters, Notches and Weirs (description only for notches and weirs). Hydraulic coefficients, Velocity measurements: Pitot tube and Pitot-static tube.	10	15%
IV	Pipe Flow: Viscous flow: Reynolds experiment to classify laminar and turbulent flows, significance of Reynolds number, critical Reynolds number, shear stress and velocity distribution in a pipe, law of fluid friction, head loss due to friction, Hagen Poiseuille equation. Turbulent flow: Darcy- Weisbach equation, Chezy's equation Moody's chart, Major and minor energy losses, hydraulic gradient and total energy line, flow through long pipes, pipes in series, pipes in parallel, equivalent pipe, siphon, transmission of power through pipes, efficiency of transmission, Water hammer, Cavitation.	12	15%
SECOND INTERNAL EXAM			
V	Concept of Boundary Layer : Growth of boundary layer over a flat plate and definition of boundary layer thickness, displacement thickness, momentum thickness and energy thickness, laminar and turbulent boundary layers, laminar sub layer, velocity profile, Von- Karman momentum integral equations for the boundary layers, calculation of drag, separation of boundary and methods of control.	10	20%

NEHRU COLLEGE OF ENGINEERING & RESEARCH CENTRE
Pampady
Thiruvilwamala
Thrissur-DT

PRINCIPAL
Nehru College of
Engineering and Research Centre
Pampady, Thiruvilwamala, Thrissur Dt
Pin 680597, Kerala

Course Plan			
Module	**Contents**	**Hours**	**Sem. Exam Marks**
I	Introduction: Fluids and continuum, Physical properties of fluids, density, specific weight, vapour pressure, Newton's law of viscosity. Ideal and real fluids, Newtonian and non-Newtonian fluids. Fluid Statics- Pressure-density-height relationship, manometers, pressure on plane and curved surfaces, center of pressure, buoyancy, stability of immersed and floating bodies, fluid masses subjected to uniform accelerations, measurement of pressure.	8	15%
II	Kinematics of fluid flow: Eulerian and Lagrangian approaches, classification of fluid flow, 1-D, 2-D and 3-D flow, steady, unsteady, uniform, non-uniform, laminar, turbulent, rotational, irrotational flows, stream lines, path lines, streak lines, stream tubes, velocity and acceleration in fluid, circulation and vorticity, stream function and potential function, Laplace equation, equipotential lines flow nets, uses and limitations,	8	15%
FIRST INTERNAL EXAM			
III	Dynamics of Fluid flow: Fluid Dynamics: Energies in flowing fluid, head, pressure, dynamic, static and total head, Control volume analysis of mass, momentum and energy, Equations of fluid dynamics: Differential equations of mass, energy and momentum (Euler's equation), Navier-Stokes equations (without proof) in rectangular and cylindrical co-ordinates, Bernoulli's equation and its applications: Venturi and Orifice meters, Notches and Weirs (description only for notches and weirs). Hydraulic coefficients, Velocity measurements: Pitot tube and Pitot-static tube.	10	15%
IV	Pipe Flow: Viscous flow: Reynolds experiment to classify laminar and turbulent flows, significance of Reynolds number, critical Reynolds number, shear stress and velocity distribution in a pipe, law of fluid friction, head loss due to friction, Hagen Poiseuille equation. Turbulent flow: Darcy- Weisbach equation, Chezy's equation Moody's chart, Major and minor energy losses, hydraulic gradient and total energy line, flow through long pipes, pipes in series, pipes in parallel, equivalent pipe, siphon, transmission of power through pipes, efficiency of transmission, Water hammer, Cavitation.	12	15%
SECOND INTERNAL EXAM			
V	Concept of Boundary Layer : Growth of boundary layer over a flat plate and definition of boundary layer thickness, displacement thickness, momentum thickness and energy thickness, laminar and turbulent boundary layers, laminar sub layer, velocity profile, Von- Karman momentum integral equations for the boundary layers, calculation of drag, separation of boundary and methods of control.	10	20%

NEHRU COLLEGE OF ENGINEERING & RESEARCH CENTRE
THIRUVILWAMALA
THRISSUR-DT

PRINCIPAL
Nehru College of
Engineering and Research Centre
Thiruvilwamala, Thrissur Dt
Pin - 680 597, Kerala

VI	Dimensional Analysis and Hydraulic similitude: Dimensional analysis, Buckingham's theorem, important dimensional numbers and their significance, geometric, Kinematic and dynamic similarity, model studies. Froude, Reynold, Weber, Cauchy and Mach laws- Applications and limitations of model testing, simple problems only	8	20%
END SEMESTER EXAM			

Question Paper Pattern

Total marks: 100, Time: 3 hrs

The question paper should consist of three parts

Part A

4 questions uniformly covering modules I and II. Each question carries 10 marks

Students will have to answer any three questions out of 4 (3X10 marks =30 marks)

Part B

4 questions uniformly covering modules III and IV. Each question carries 10 marks

Students will have to answer any three questions out of 4 (3X10 marks =30 marks)

Part C

6 questions uniformly covering modules V and VI. Each question carries 10 marks

Students will have to answer any four questions out of 6 (4X10 marks =40 marks)

Note: In all parts, each question can have a maximum of four sub questions, if needed.

NEHRU COLLEGE OF ENGINEERING & RESEARCH CENTRE
THIRUVILWAMALA, THRISSUR-DT

PRINCIPAL
Nehru College of
Engineering and Research Centre
Pampady Thiruvilwamala Thrissur Dt
Pin 680 597 Kerala

Course No.	Course Name	L-T-P-Credits	Year of Introduction
ME205	THERMODYNAMICS	3-1-0-4	2016

Prerequisite: nil

Course Objectives:

1. To understand basic thermodynamic principles and laws
2. To develop the skills to analyze and design thermodynamic systems

Syllabus

Basic concepts, zeroth law of thermodynamics and thermometry, energy, first law of thermodynamics, second law of thermodynamics, entropy, irreversibility and availability, third law of thermodynamics pure substances, equations of state, properties of gas mixtures, Introduction to ideal binary solutions, general thermodynamic relationships, combustion thermodynamics

Expected outcome: At the end of the course the students will be able to

1. Understand the laws of thermodynamics and their significance
2. Apply the principles of thermodynamics for the analysis of thermal systems

Text Books

1. P.K.Nag, Engineering Thermodynamics, McGraw Hill,2013
2. E.Rathakrishnan Fundamentals of Engineering Thermodynamics, PHI,2005

References Books:

1 Y. A. Cengel and M. A.Boles,Thermodynamics an Engineering Approach,McGraw Hill, 2011
2 G.VanWylen, R.Sonntag and C.Borgnakke, Fundamentals of Classical Thermodynamics, John Wiley & Sons,2012
3. Holman J.P, Thermodynamics, McGraw Hill, 2004
4. M.Achuthan, Engineering Thermodynamics, PHI,2004

Steam Tables/Data book

5. R.S.Khurmi, Steam table with Mollier chart, S.Chand,2008

NEHRU COLLEGE OF ENGINEERING & RESEARCH CENTRE THIRUVILWAMALA THRISSUR-DT.

PRINCIPAL
Nehru College of
Engineering and Research Centre
Pampady, Thiruvilwamala, Thrissur Dt

Course Plan			
Module	**Contents**	**Hours**	**Sem. Exam Marks**
I	Role of Thermodynamics in Engineering and Science -- Applications of Thermodynamics Basic Concepts - Macroscopic and Microscopic viewpoints, Concept of Continuum, Thermodynamic System and Control Volume, Surrounding, Boundaries, Types of Systems, Universe, Thermodynamic properties, Process, Cycle, Thermodynamic Equilibrium, Quasi – static Process, State, Point and Path function. (Review only- self study) Zeroth Law of Thermodynamics, Measurement of Temperature-Thermometry, reference Points, Temperature Scales, Ideal gas temperature scale, Comparison of thermometers-Gas Thermometers, Thermocouple, Resistance thermometer Energy - Work - Pdv work and other types of work transfer, free expansion work, heat and heat capacity.	7	15%
II	Joule's Experiment- First law of Thermodynamics - First law applied to Non flow Process- Enthalpy- specific heats- PMM1, First law applied to Flow Process, Mass and Energy balance in simple steady flow process. Applications of SFEE, Transient flow –Filling and Emptying Process. (Problems), Limitations of the First Law.	8	15%
FIRST INTERNAL EXAM			
III	Second Law of Thermodynamics, Thermal Reservoir, Heat Engine, Heat pump - Performance factors, Kelvin-Planck and Clausius Statements, Equivalence of two statements, Reversibility, Irreversible Process, Causes of Irreversibility, Corollaries of second law, PMM2, Carnot's theorem and its corollaries, Absolute Thermodynamic Temperature scale. Clausius Inequality, Entropy- Causes of Entropy Change, Entropy changes in various thermodynamic processes, principle of increase of entropy and its applications, Entropy generation in open and closed system, Entropy and Disorder, Reversible adiabatic process- isentropic process	10	15%
IV	Available Energy, Availability and Irreversibility- Useful work, Dead state, Availability function, Availability and irreversibility in open and closed systems - Gouy-Stodola theorem , Third law of thermodynamics. Pure Substances, Phase Transformations, Triple point, properties during change of phase, T-v, p-v and p-T diagram of pure substance, p-v-T surface, Saturation pressure and Temperature, T-h and T-s diagrams, h-s diagrams or Mollier Charts, Dryness Fraction, steam tables. Property calculations using steam tables.	10	15%
SECOND INTERNAL EXAM			

NEHRU COLLEGE OF ENGINEERING & RESEARCH CENTRE
THIRUVAMPADY
THRISSUR-DT

PRINCIPAL
Nehru College of
Engineering and Research Centre
Pampady Thiruvalamala Trissur Dt
Pin 680 597 Kerala

V	The ideal Gas Equation, Characteristic and Universal Gas constants, Deviations from ideal Gas Model: Equation of state of real substances- Vander Waals Equation of State, Berthelot, Dieterici, and Redlich-Kwong equations of state , Virial Expansion, Compressibility factor, Law of corresponding state, Compressibility charts Mixtures of ideal Gases – Mole Fraction, Mass fraction, Gravimetric and volumetric Analysis, Dalton's Law of partial pressure, Amagat's Laws of additive volumes, Gibbs-Dalton's law -Equivalent Gas constant and Molecular Weight, Properties of gas mixtures: Internal Energy, Enthalpy, specific heats and Entropy, Introduction to real gas mixtures- Kay's rule. *Introduction to ideal binary solutions, Definition of solution, ideal binary solutions and their characteristics, Deviation from ideality, Raoult's Law, Phase diagram, Lever rule(*in this section numerical problems not)	11	20%
VI	General Thermodynamic Relations – Combined First and Second law equations – Helmholtz and Gibb's functions - Maxwell's Relations, Tds Equations. The Clapeyron Equation, equations for internal energy, enthalpy and entropy, specific heats, Throttling process, Joule Thomson Coefficient, inversion curve. #Introduction to thermodynamics of chemically reacting systems, Combustion, Thermochemistry – Theoretical and Actual combustion processes- Definition and significance of equivalence ratio, enthalpy of formation , enthalpy of combustion and heating value (#in this section numerical problems not included)	10	20%
END SEMESTER EXAM			

Question Paper Pattern

Total marks: 100, Time: 3 hrs
Approved steam tables permitted
The question paper should consist of three parts

Part A
4 questions uniformly covering modules I and II. Each question carries 10 marks
Students will have to answer any three questions out of 4 (3X10 marks =30 marks)

Part B
4 questions uniformly covering modules III and IV. Each question carries 10 marks
Students will have to answer any three questions out of 4 (3X10 marks =30 marks)

Part C
6 questions uniformly covering modules V and VI. Each question carries 10 marks
Students will have to answer any four questions out of 6 (4X10 marks =40 marks)

Note: In all parts, each question can have a maximum of four sub questions, if needed.

NEHRU COLLEGE OF ENGINEERING & RESEARCH CENTRE
Pampady
THIRUVILWAMALA,
THRISSUR DT

PRINCIPAL
Nehru College of
Engineering and Research Centre
Campady, Thiruvilwamala, Thrissur (Dt)

Course No.	Course Name	L-T-P-Credits	Year of Introduction
ME210	METALLURGY AND MATERIALS ENGINEERING	3-0-0-3	2016

Prerequisite: nil

Course Objectives:

1. To provide fundamental science relevant to materials
2. To provide physical concepts of atomic radius, atomic structure, chemical bonds, crystalline and non-crystalline materials and defects of crystal structures, grain size, strengthening mechanisms, heat treatment of metals with mechanical properties and changes in structure
3. To enable students to be more aware of the behavior of materials in engineering applications and select the materials for various engineering applications.
4. To understand the causes behind metal failure and deformation
5. To determine properties of unknown materials and develop an awareness to apply this knowledge in material design.

Syllabus:-Chemical bonds – crystallography- imperfections- crystallization- diffusion- phase diagrams-heat treatment – strengthening mechanisms- hot and cold working – alloying- ferrous and non ferrous alloys- fatigue-creep- basics, need, properties and applications of modern engineering materials.

Expected outcome: At the end of the course students will be able to

1. Identify the crystal structures of metallic materials.
2. Analyze the binary phase diagrams of alloys Fe-Fe_3C, etc.
3. Correlate the microstructure with properties, processing and performance of metals.
4. Recognize the failure of metals with structural change.
5. Select materials for design and construction.
6. Apply core concepts in materials science to solve engineering problems.

Text Books

1. Raghavan V, Material Science and Engineering, Prentice Hall,2004
2. Jose S and Mathew E V, Metallurgy and Materials Science, Pentagon, 2011

Reference

1. Anderson J.C. *et.al.*, Material Science for Engineers,Chapman and Hall,1990
2. Clark and Varney, Physical metallurgy for Engineers, Van Nostrand,1964
3. Reed Hill E. Robert, Physical metallurgy principles, 4th Edn. Cengage Learning,2009
4. Avner H Sidney, Introduction to Physical Metallurgy, Tata McGraw Hill,2009
5. Callister William. D., Material Science and Engineering, John Wiley,2014
6. Dieter George E, Mechanical Metallurgy,Tata McGraw Hill,1976
7. Higgins R.A. - Engineering Metallurgy part - I – ELBS,1998
8. Myers Marc and Krishna Kumar Chawla, Mechanical behavior of materials, Cambridge University press,2008
9. Van Vlack -Elements of Material Science - Addison Wesley,1989
10. http://nptel.ac.in/courses/113106032/1
11. http://www.myopencourses.com/subject/principles-of-physical-metallurgy-2
12. http://ocw.mit.edu/courses/materials-science-and-engineering/3-091sc-introduction-to-

NEHRU COLLEGE OF ENGINEERING & RESEARCH CENTRE
PAMPADY THIRUVILWAMALA THRISSUR DT

PRINCIPAL
Nehru College of
Engineering and Research Centre
Pampady, Thiruvilwamala, Thrissur Dt
Pin 680 597 Kerala

solid-state-chemistry-fall-2010/syllabus/
13. http://www.msm.cam.ac.uk/teaching/partIA.php

Course Plan

Module	Contents	Hours	Semester Exam. Marks
I	Earlier and present development of atomic structure; attributes of ionization energy and conductivity, electronegativity and alloying; correlation of atomic radius to strength; electron configurations; electronic repulsion Primary bonds: - characteristics of covalent, ionic and metallic bond: attributes of bond energy, cohesive force, density, directional and non-directional and ductility. properties based on atomic bonding:- attributes of deeper energy well and shallow energy well to melting temperature, coefficient of thermal expansion - attributes of modulus of elasticity in metal cutting process -Secondary bonds:- classification- hydrogen bond and anomalous behavior of ice float on water, application- atomic mass unit and specific heat, application. *(brief review only, no University questions and internal assessment from these portions).*	2	15%
	Crystallography:- Crystal, space lattice, unit cell- BCC, FCC, HCP structures - short and long range order - effects of crystalline and amorphous structure on mechanical properties.	1	
	Coordination number and radius ratio; theoretical density; simple problems - Polymorphism and allotropy.	1	
	Miller Indices: - crystal plane and direction *(brief review)* - Attributes of miller indices for slip system, brittleness of BCC, HCP and ductility of FCC - Modes of plastic deformation: - Slip and twinning.	1	
	Schmid's law, equation, critical resolved shear stress, correlation of slip system with plastic deformation in metals and applications.	1	
II	Mechanism of crystallization: Homogeneous and heterogeneous nuclei formation, under cooling, dendritic growth, grain boundary irregularity.	1	15%
	Effects of grain size, grain size distribution, grain shape, grain orientation on dislocation/strength and creep resistance - Hall - Petch theory, simple problems	1	
	Classification of crystal imperfections: - types of dislocation – effect of point defects on mechanical properties - forest of dislocation, role of surface defects on crack initiation.	1	

NEHRU COLLEGE OF ENGINEERING & RESEARCH CENTRE
PAMPADY THIRUVILWAMALA THRISSUR-DT

PRINCIPAL
Nehru College of
Engineering and Research Centre
Pampady, Thiruvilwamala, Thrissur Dt

	Burgers vector –dislocation source, significance of Frank Read source in metals deformation - Correlation of dislocation density with strength and nano concept, applications.	1	
	Significance high and low angle grain boundaries on dislocation – driving force for grain growth and applications during heat treatment.	1	
	Polishing and etching to determine the microstructure and grain size.	1	
	Fundamentals and crystal structure determination by X – ray diffraction, simple problems –SEM and TEM.	1	
	Diffusion in solids, Fick's laws, mechanisms, applications of diffusion in mechanical engineering, simple problems.	1	
	FIRST INTERNAL EXAMINATION		
III	Phase diagrams: - Limitations of pure metals and need of alloying - classification of alloys, solid solutions, Hume Rothery's rule - equilibrium diagram of common types of binary systems: five types.	2	**15%**
	Coring - lever rule and Gibb's phase rule - Reactions: - monotectic, eutectic, eutectoid, peritectic, peritectoid.	1	
	Detailed discussion on Iron-Carbon equilibrium diagram with microstructure and properties changes in austenite, ledeburite, ferrite, cementite, special features of martensite transformation, bainite, spheroidite etc.	1	
	Heat treatment: - Definition and necessity – TTT for a eutectoid iron–carbon alloy, CCT diagram, applications - annealing, normalizing, hardening, spheroidizing.	1	
	Tempering:- austermpering, martempering and ausforming - Comparative study on ductility and strength with structure of pearlite, bainite, spherodite, martensite, tempered martensite and ausforming.	1	
	Hardenability, Jominy end quench test, applications- Surface hardening methods:- no change in surface composition methods :- Flame, induction, laser and electron beam hardening processes- change in surface composition methods :carburizing and Nitriding; applications.	2	

NEHRU COLLEGE OF ENGINEERING & RESEARCH CENTRE
PANJAL
THIRUVILWAMALA
THRISSUR

PRINCIPAL
Nehru College of
Engineering and Research Centre
Panjal, Thiruvilwamala, Thrissur Dt
Pin [illegible] Kerala

IV	Types of Strengthening mechanisms: - work hardening, equation - precipitation strengthening and over ageing-dispersion hardening.	1	15%
	Cold working: Detailed discussion on strain hardening; recovery; re-rystallization, effect of stored energy; re-crystallization temperature - hot working Bauschinger effect and attributes in metal forming.	1	
	Alloy steels:- Effects of alloying elements on steel: dislocation movement, polymorphic transformation temperature, alpha and beta stabilizers, formation and stability of carbides, grain growth, displacement of the eutectoid point, retardation of the transformation rates, improvement in corrosion resistance, mechanical properties	1	
	Nickel steels, Chromium steels etc. - Enhancement of steel properties by adding alloying elements: - Molybdenum, Nickel, Chromium, Vanadium, Tungsten, Cobalt, Silicon, Copper and Lead.	1	15%
	High speed steels:- Mo and W types, effect of different alloying elements in HSS	1	
	Cast irons: Classifications; grey, white, malleable and spheroidal graphite cast iron etc, composition, microstructure, properties and applications.	1	
	Principal Non ferrous Alloys: - Aluminum, Copper, Magnesium, Nickel, study of composition, properties, applications, reference shall be made to the phase diagrams whenever necessary.	1	
	SECOND INTERNAL EXAMINATION		
V	Fatigue: - Stress cycles – Primary and secondary stress raisers - Characteristics of fatigue failure, fatigue tests, S-N curve.	1	20%
	Factors affecting fatigue strength: stress concentration, size effect, surface roughness, change in surface properties, surface residual stress.	1	
	Ways to improve fatigue life – effect of temperature on fatigue, thermal fatigue and its applications in metal cutting	1	
	Fracture: – Brittle and ductile fracture – Griffith theory of brittle fracture – Stress concentration, stress raiser – Effect of plastic deformation on crack propagation.	1	
	transgranular, intergranular fracture - Effect of impact loading on ductile material and its application in forging, applications - Mechanism of fatigue failure.	1	

NEHRU COLLEGE OF ENGINEERING & RESEARCH CENTRE
THIRUVILWAMALA, THRISSUR-DT

PRINCIPAL
Nehru College of
Engineering and Research Centre
Pampady, Thiruvilwamala, Thrissur Dt
Pin - 680 597, Kerala

	Structural features of fatigue: - crack initiation, growth, propagation - Fracture toughness (definition only) - Ductile to brittle transition temperature (DBTT) in steels and structural changes during DBTT, applications.	1	
V1	Creep: - Creep curves – creep tests - Structural change:- deformation by slip, sub-grain formation, grain boundary sliding	1	20%
	Mechanism of creep deformation - threshold for creep, prevention against creep - Super plasticity: need and applications	1	
	Composites:- Need of development of composites - geometrical and spatial Characteristics of particles – classification - fiber phase: - characteristics, classifications - matrix phase:- functions – only need and characteristics of PMC, MMC, and CMC – applications of composites: aircraft applications, aerospace equipment and instrument structure, industrial applications of composites, marine applications, composites in the sporting goods industry, composite biomaterials..	2	
	Modern engineering materials: - only fundamentals, need, properties and applications of, intermetallics, maraging steel, super alloys, Titanium – introduction to nuclear materials, smart materials and bio materials.	2	
	Ceramics:-coordination number and radius ratios- AX, A_mX_p, $A_mB_mX_p$ type structures – applications.	1	

Question Paper Pattern

Total marks: 100, Time: 3 hrs

The question paper should consist of three parts

Part A

4 questions uniformly covering modules I and II. Each question carries 10 marks

Students will have to answer any three questions out of 4 (3X10 marks =30 marks)

Part B

4 questions uniformly covering modules III and IV. Each question carries 10 marks

Students will have to answer any three questions out of 4 (3X10 marks =30 marks)

Part C

6 questions uniformly covering modules V and VI. Each question carries 10 marks

Students will have to answer any four questions out of 6 (4X10 marks =40 marks)

Note: In all parts, each question can have a maximum of four sub questions, if needed.

NEHRU COLLEGE OF ENGINEERING & RESEARCH CENTRE
Pampady
THIRUVILWAMALA
THRISSUR-DT

PRINCIPAL
Nehru College of
Engineering and Research Centre
Pampady, Thiruvilwamala, Thrissur Dt
Pin - 680 597, Kerala

Course No.	Course Name	L-T-P-Credits	Year of Introduction
ME220	MANUFACTURING TECHNOLOGY	3-0-0-3	2016

Prerequisite: Nil

Course Objectives:-

1. To give an exposure to different techniques of casting and molds required.
2. To provide an exposure to different rolling processes and different rolled products
3. To familiarize with different forging methods, cautions to be adopted in die design.
4. To give an introduction to various work and tool holding devices used in manufacturing.
5. To introduce to the bending, shearing and drawing processes of sheet metal working and allied machines,
6. To give an understanding of welding metallurgy and weldability and to introduce various metal joining techniques.

SYLLABUS

Casting –patterns - Cores – Gating – Risering – Defects in Castings - Rolling –Defects in Rolled parts- forging – Coining – Heading – Piercing –Die Design– Extrusion Process– Extrusion Defects – Drawing Process -Principles of Location –Principles of Clamping – Types of Clamp -Sheet metal characteristics –Deep drawing –Spinning –Definition of Welding – Weldability – Solidification of Weld Metal – Heat Affected Zone – Welding Defects - Gas Welding -Arc Welding - Ultrasonic Welding – Friction Welding – Resistance Welding — Brazing- Soldering.

Expected outcomes: At the end of the course the students will be able to

1. Acquire knowledge in various casting processes and technology related to them.
2. Understand the rolling passes required for getting required shapes of rolled products.
3. Discuss important aspects of forging techniques
4. Discuss sheet metal working processes and their applications to produce various shapes and products
5. Acquire knowledge in various types of welding processes.

Text books:-

1. Amitabha Ghosh and Ashok Kumar Mallick, Manufacturing Science Affiliated East West Press Ltd, New Delhi, 2002
2. S.Kalpakjian and Steven R Schimid, Manufacturing Engineering and Technology, Pearson,2001

Reference books:-

1. RAO, Manufacturing Technology-Vol 2 3e, McGraw Hill Education India, 2013
2. RAO, Manutacturing Technology-Vol 1 4e, McGraw Hill Education India, 2013
3. Cyril Donaldson and George H LeCain, Tool Design,TMH
4. Handbook of Fixture Design – ASTME
5. Campbell J. S., Principles of Manufacturing Materials and Processes, Tata McGraw Hill, 1999
6. B.R Beeley, Foundry Technology, Elsevier, 2001
7. Richard W. Heine, Carl R. Loper, Philip C. Rosenthal, Principles of Metal Casting.

NEHRU COLLEGE OF ENGINEERING & RESEARCH CENTRE
PALLAKAD, THRISSUR
PRINCIPAL
Nehru College of Engineering and Research Centre

Tata McGraw-Hill Education, 2001
8. Paul Degarma E and Ronald A. Kosher ,Materials and Processes in Manufacturing, Wiley,20111
9. P. N. Rao,Manufacturing Technology Foundry, Forming and Welding, Tata McGraw-Hill Education,2011
10. HMT Production Technology, 1e McGraw Hill,2001

PRINCIPAL
Nehru College of
Engineering and Research Centre
Pampady Thiruvilwamala Thrissur Dt
Pin - 680597 Kerala

NEHRU COLLEGE OF ENGINEERING & RESEARCH CENTRE
PAMPADY
THIRUVILWAMALA
THRISSUR DT

Course Plan			
Module	**Contents**	**Hours**	**Semester Examination Marks**
I	Sand Casting – Sand Molds-Types of Molding Sands and Testing	1	15%
	Type of patterns - Pattern Materials	1	
	Cores –Types and applications –Sand Molding Machines	1	
	Gating System – Risering	1	
	Shell Mold Casting – Ceramic Mold Casting	1	
	Investment Casting – Vacuum Casting – Slush Casting	1	
	Pressure Casting – Die Casting – Centrifugal Casting	1	
	Design Considerations based on Various Shapes - Defects in Castings – simple problems in casting	1	
II	Principles of Rolling –Types of rolling mills, Mechanics of Flat Rolling	1	15%
	Roll Force and Power Requirement - Neutral Point	1	
	Hot and Cold Rolling	1	
	Defects in Rolled Plates - Rolling Mills	1	
	Ring Rolling – Thread Rolling	1	
	Applications- Rolling of tubes, wheels, axles and I-beams	1	
FIRST INTERNAL EXAM			
III	Classification of forging – Forging methods – Forging under sticking condition	1	15%
	Precision Forging – Coining – Heading – Piercing	1	
	Die Design:- Preshaping, Design Features, Draft Angles – Die Materials and Lubrication	1	
	Forging Machines – Forging Defects and tests	1	
	Extrusion Process - Hot Extrusion – Cold Extrusion	1	
	Impact Extrusion – Extrusion Defects – Drawing Process, wire drawing process	1	

NEHRU COLLEGE OF ENGINEERING & RESEARCH CENTRE
Pampady
Thiruvilwamala
Thrissur-680 597

PRINCIPAL
Nehru College of
Engineering and Research Center
Pampady, Thiruvilwamala, Thrissur (Dt)
Pin - 680 597 Kerala

IV	Principles Location - Degrees of Freedom, 3-2-1 principle of locating	1	15%
	Locating from Planes - Locating from Circular Surfaces	1	
	Concentric Locating - Principles of Clamping	1	
	Types of Clamps - Strap Clamps Slide Clamps - Swing Clamps - Hinge Clamps	1	
	Vacuum Clamping - Magnetic Clamping	1	
SECOND INTERNAL EXAM			
V	Sheet metal characteristics – Typical shearing	1	20%
	Bending Sheet and Plate – Spingback - Bending Force	1	
	Press Brake Forming - Tube Bending	1	
	Stretch Forming - Deep Drawing	1	
	Rubber forming - Spinning Shear Spinning - Tube Spinning	1	
	Definition of Welding - Weldability – Solidification of the Weld Metal	1	
	Heat Affected Zone – correlation of strength of welded joint with structure - Welding Defects	1	
VI	Gas Welding: – Flame Characteristics	1	20%
	Equipment, fluxes and filler rods	1	
	Arc Welding – Applications and Equipment	1	
	Electrodes	1	
	Shielded Metal Arc Welding – Submerged Arc Welding	1	
	GTAW – Plasma Arc Welding	1	
	Ultrasonic Welding – Friction Welding	1	
	Resistance Spot Welding	1	
	Resistance Seam Welding – Stud Welding – Percussion Welding - simple problems in welding	1	
	Brazing:- Filler Metals, Methods - Soldering:- Techniques, Types of Solders and Fluxes	1	
END SEMESTER EXAM			

NEHRU COLLEGE OF ENGINEERING & RESEARCH CENTRE
PAMPADY THIRUVILWAMALA THRISSUR-DT.

PRINCIPAL
Nehru College of
Engineering and Research Centre
Pampady, Thiruvilwamala, Thrissur Dt
Pin - 680 597, Kerala

Question Paper Pattern

Total marks: 100. Time: 3 hrs

The question paper should consist of three parts

Part A

4 questions uniformly covering modules I and II. Each question carries 10 marks

Students will have to answer any three questions out of 4 (3X10 marks =30 marks)

Part B

4 questions uniformly covering modules III and IV. Each question carries 10 marks

Students will have to answer any three questions out of 4 (3X10 marks =30 marks)

Part C

6 questions uniformly covering modules V and VI. Each question carries 10 marks

Students will have to answer any four questions out of 6 (4X10 marks =40 marks)

Note: In all parts, each question can have a maximum of four sub questions, if needed.

NEHRU COLLEGE OF ENGINEERING & RESEARCH CENTRE
PAMPADY THIRUVILWAMALA THRISSUR-DT

PRINCIPAL
Nehru College of
Engineering and Research Centre
Pampady, Thiruvilwamala, Thrissur Dt
Pin - 680 597, Kerala

Course code	Course Name	L-T-P - Credits	Year of Introduction
ME301	MECHANICS OF MACHINERY	3-1-0-4	2016

Prerequisite : Nil

Course Objectives

To provide knowledge on kinematics of selected mechanisms, design of cams, theory and analysis of gears, gear trains and synthesis of mechanisms.

Syllabus

Introduction to kinematics and mechanisms - different mechanisms, displacement, velocity, and acceleration analysis. Cam and followers - displacement, velocity, and acceleration analysis, cam profile synthesis. Gears – law of gearing, interference, gear trains, applications. Kinematic synthesis - dimensional synthesis, graphical synthesis, position synthesis, analytical synthesis, case study.

Expected outcome

The students will be able to solve practical problems related to kinematics of mechanisms

Text Books:

1. Ballaney P. L., Theory of Machines and Mechanisms, Khanna Publishers,2005
2. S. S. Rattan, Theory of Machines, Tata Mc Graw Hill,2009

References:

1. C. E. Wilson, P. Sadler, Kinematics and Dynamics of Machinery, Pearson Education,2005
2. D. H. Myszka, Machines and Mechanisms Applied Kinematic Analysis, Pearson Education,2013
3. G. Erdman, G. N. Sandor, Mechanism Design: Analysis and synthesis Vol I & II, Prentice Hall of India,1984
4. Ghosh, A. K. Malik, Theory of Mechanisms and Machines, Affiliated East West Press,1988
5. J. E. Shigley, J. J. Uicker, Theory of Machines and Mechanisms, McGraw Hill,2010

Course Plan

Module	Contents	Hours	Sem. Exam Marks
I	Introduction to kinematics and mechanisms - various mechanisms, kinematic diagrams, degree of freedom- Grashof's criterion, inversions, coupler curves	3	15%
	straight line mechanisms exact, approximate – Ackerman Steering Mechanism - Hooke's joint - Geneva mechanism - mechanical advantage, transmission angle	4	
	Displacement, velocity and acceleration analysis - relative motion - relative velocity - instant centre -Kennedy's theorem	4	
II	Relative acceleration - Coriolis acceleration - graphical and analytical methods – complex number methods - computer oriented methods.	4	15%
	Cams - classification of cam and followers - displacement diagrams, velocity and acceleration analysis of SHM, uniform velocity, uniform acceleration, cycloidal motion	4	
	FIRST INTERNAL EXAMINATION		
III	Graphical cam profile synthesis, pressure angle	2	15%

NEHRU COLLEGE OF ENGINEERING & RESEARCH CENTRE
PAMPADY THIRUVILWAMALA, THRISSUR DT.
PRINCIPAL
Nehru College of Engineering and Research Center
Pampady Thiruvilwamala Thrissur Dt

	Analysis of tangent cam with roller follower and circular cam with flat follower	6	
	Introduction to polynomial cams.	2	
IV	Gears – terminology of spur gears – law of Gearing - involute spur gears involutometry - contact ratio - interference - backlash - gear standardization - interchangability	4	15%
	Non-standard gears, centre distance modification, long and short addendum system. - internal gears - theory and details of bevel, helical and worm gearing	4	
SECOND INTERNAL EXAMINATION			
V	Gear trains - simple and compound gear trains - planetary gear trains – differential -solution of planetary gear train problems - applications	5	20%
	Kinematic synthesis (planar mechanisms) - tasks of kinematic synthesis – type, number and dimensional synthesis – precision points	4	
VI	Graphical synthesis for motion - path and prescribed timing - function generator	3	20%
	2 position and 3 position synthesis – overlay Method	3	
	Analytical synthesis techniques, Freudenstein's equation – complex number methods - one case study in synthesis of mechanism.	4	
END SEMESTER EXAM			

QUESTION PAPER PATTERN:

Maximum marks: 100 **Time: 3 hrs**

The question paper should consist of three parts

Part A

There should be 2 questions each from module I and II

Each question carries 10 marks

Students will have to answer any three questions out of 4 (3X10 marks =30 marks)

Part B

There should be 2 questions each from module III and IV

Each question carries 10 marks

Students will have to answer any three questions out of 4 (3X10 marks =30 marks)

Part C

There should be 3 questions each from module V and VI

Each question carries 10 marks

Students will have to answer any four questions out of 6 (4X10 marks =40 marks)

Note: in all parts each question can have a maximum of four sub questions

NEHRU COLLEGE OF ENGINEERING & RESEARCH CENTRE

PRINCIPAL
Nehru College of
Engineering and Research Centre

Course code	Course Name	L-T-P-Credits	Year of Introduction
ME303	MACHINE TOOLS AND DIGITAL MANUFACTURING	3-0-0-3	2016

Prerequisite: Nil

Course Objectives: The main objectives of this course are

1. To introduce students to the scientific principles underlying material behavior during manufacturing processes so as to enable them to undertake calculations of forces, tool stresses and material removal rates.
2. To understand various machine tools such as lathe, drilling machine, reciprocating machines etc. and their operations.
3. To impart knowledge of appropriate parameters to be used for various machining operations.
4. To develop knowledge on the importance of milling grinding and super finishing in metal cutting process.
5. To introduce the fundamentals of digital manufacturing.

Syllabus

Introduction to metal cutting, Mechanism of metal removal, Merchants theory, Frictional forces in metal cutting. Thermal aspects of machining, General purpose machine tools, Principle and operation of lathe, Drilling machines, Reciprocating machines, Milling machines, Grinding machines. Super finishing operations, Semi-automatic machine tools, Single and multi-spindle machines. Introduction to digital manufacturing and digital manufacturing science.

Expected outcomes:

The students will be able to

1. Analyze various machining process and calculate relevant quantities such us velocities, forces and powers.
2. Identify and explain the function of the basic components of a machine tool.
3. Understand the limitations of various machining process with regard to shape formation and surface texture.
4. Apply cutting mechanics to metal machining based on cutting force and power consumption.
5. Understand the use of various machine tools and their fields of application.
6. Understand the principle and applications of grinding and super finishing operations.
7. Get a basic knowledge on the importance of digital manufacturing.

Text books

1. Chapman W. A. J., Workshop Technology, Viva books (P) Ltd,1988
2. HMT, Production Technology, Tata McGraw-Hill,2001
3. Zude Zhou, Shane (Shengquan) Xie and Dejun Chen, Fundamentals of Digital Manufacturing Science, Springer-Verlag London Limited,2012

NEHRU COLLEGE OF ENGINEERING & RESEARCH CENTRE
Pampady
THIRUVILWAMALA
THRISSUR-DT

PRINCIPAL
Nehru College of
Engineering and Research Centre
Pampady, Thiruvilwamala, Thrissur Dt
Pin - 680 597, Kerala

Reference books

1. Acharkan, N., Machine Tool Design Vol. 1 to 4, MIR Publication,2000
2. Chernov, Machine Tools, MIR Publication,1984
3. Ghosh A. And Malic A. K., Manufacturing Science, East West Press, 2010
4. Hajra Choudary, Elements of workshop technology, Vol I & II, Media Publishers, 2010
5. Lihui Wang and Andrew Yeh Ching Nee, Collaborative Design and Planning for Digital Manufacturing, Springer-Verlag London Limited, 2009
6. Malkin Stephen, Grinding Technology: Theory and Applications of Machining with Abrasives, Industrial press, 2008
7. Poul De Garmo, J.T Black, R.A.Kosher, Materials and Processes in Manufacturing, Prentice Hall of India Pvt. Ltd., 1997.

Course Plan

Module	Contents	Hours	End Sem. Exam. Marks
I	Introduction to metal cutting: Tool nomenclature – Attributes of each tool nomenclature – Attributes of feed and tool nomenclature on surface roughness obtainable	1	15%
	Orthogonal and oblique cutting - Mechanism of metal removal – Primary and secondary deformation shear zones	1	
	Mechanism of chip formation – Types of chips, need and types of chip breakers – Merchant's theory	1	
	Analysis of cutting forces in orthogonal cutting– Work done, power required (simple problems)	1	
	Friction forces in metal cutting – development of cutting tool materials	1	
	Thermal aspects of machining -Tool wear and wear mechanisms	1	
	Factors affecting tool life– Economics of machining (simple problems) Cutting fluids	1 1	
II	General purpose machine tools – Principle and operation of lathe – Types of lathes and size specification	1	15%
	Work holding parts of lathes and their functions – Main operations	1	
	Taper turning and thread cutting – Attachments	1	
	Feeding mechanisms, Apron mechanisms	1	
	Drilling Machines – Types – Work holding devices	1	
	Tool holding devices – Drill machine operations	1	
	Drilling machine tools – Twist drill nomenclature- cutting forces in drilling	1	
FIRST INTERNAL EXAMINATION			
III	Reciprocating machines: Shaping machines – Types – Size – Principal parts – Mechanism	1	15%
	Work holding devices – Operations performed – Tools	1	

NEHRU COLLEGE OF ENGINEERING & RESEARCH CENTRE
PAMPADY THIRUVILWAMALA THRISSUR-DT

PRINCIPAL
Nehru College of Engineering and Research Centre
Pampady, Thiruvilwamala, Thrissur Dt
Pin - 680597, Kerala

	Cutting speed, feed and depth of cut – Machining time.	1	
	Slotting machines – Types – Size – Principal parts – Mechanism – Work holding devices	1	
	Operations performed – Tools – Cutting speed, feed and depth of cut	1	
	Planing machines – Types – Size – Principal parts – Mechanism – Work holding devices	1	
	Operations performed – Tools – Cutting speed, feed and depth of cut – Machining time - Surface roughness obtainable.	1	
IV	Milling machines – Types – Principal parts – Milling mechanism	1	15%
	Work holding devices – Milling machine attachments	1	
	Types of milling cutters – Elements of plain milling cutters	1	
	Nomenclature – Cutting forces in milling – Milling cutter materials	1	
	Up milling, down milling and face milling operations	1	
	Calculation of machining time	1	
	Indexing – Simple indexing – Differential indexing	1	
	SECOND INTERNAL EXAMINATION		
V	Grinding machines – Classification – Operations – Surface, cylindrical and centreless grinding	1	20%
	Grinding mechanisms – Grinding wheels: Specification – types of abrasives, grain size	1	
	Types of bond, grade, structure – Marking system of grinding wheels – Selection of grinding wheels	1	
	Glazing and loading of wheels – Dressing and Truing of grinding wheels, surface roughness obtainable	1	
	Superfinishing operations: Lapping operation– Types of hand lapping – Lapping machines – Types of honing –Methods of honing	1	
	Types of honing stones – Honing conditions – Cutting fluids – Types of broaches – Force required for broaching – Surface roughness obtainable in lapping, honing and broaching operations.	1	
	Semi-automatic machine tools – Turret and capstan lathes. Automatic machine tools – Single and multi-spindle machines.	1	
V1	Introduction to Digital Manufacturing: Concepts and research and development status of digital manufacturing	1	20%
	Definition of digital manufacturing – Features and development of digital manufacturing.	1	
	Theory system of digital manufacturing science: Operation Mode and Architecture of Digital Manufacturing System	1	
	Operation reference mode of digital manufacturing system – Architecture of digital manufacturing system	1	
	Modeling theory and method of digital manufacturing science	1	
	Critical modeling theories and technologies of digital manufacturing science	1	
	Theory system of digital manufacturing science – Basic	1	

NEHRU COLLEGE OF ENGINEERING & RESEARCH CENTRE
Pampady
THIRUVILWAMALA,
THRISSUR-ST

PRINCIPAL
Nehru College of
Engineering and Research Centre
Pampady, Thiruvilwamala, Thrissur Dt

	architecture model of digital manufacturing system.		
	END SEMESTER EXAM		

Question Paper Pattern

Maximum marks: 100 **Time: 3 hrs**

The question paper should consist of three parts

Part A
There should be 2 questions each from module I and II
Each question carries 10 marks
Students will have to answer any three questions out of 4 (3X10 marks =30 marks)

Part B
There should be 2 questions each from module III and IV
Each question carries 10 marks
Students will have to answer any three questions out of 4 (3X10 marks =30 marks)

Part C
There should be 3 questions each from module V and VI
Each question carries 10 marks
Students will have to answer any four questions out of 6 (4X10 marks =40 marks)

Note: in all parts each question can have a maximum of four sub questions

NEHRU COLLEGE OF ENGINEERING & RESEARCH CENTRE
THIRUVILWAMALA
THRISSUR DT.

PRINCIPAL
Nehru College of
Engineering and Research Centre
Pampady Thiruvilwamala Thrissur Dt
Pin 680 597 Kerala

Course code	Course Name	L-T-P-Credits	Year of Introduction
ME304	DYNAMICS OF MACHINERY	2-1-0-3	2016

Prerequisite: ME301 Mechanics of Machinery

Course Objectives:

- To impart knowledge on force analysis of machinery, balancing of rotating and reciprocating masses, Gyroscopes, Energy fluctuation in Machines.
- To introduce the fundamentals in vibration, vibration analysis of single degree of freedom systems.
- To understand the physical significance and design of vibration systems with desired conditions.

Syllabus

Force analysis of machinery - static and dynamic force analysis of plane motion mechanisms. Flywheel analysis - static and dynamic balancing - balancing of rotating masses, gyroscopic couples. Vibrations – free vibrations of single degree freedom systems, damping, forced vibration, torsional vibration.

Expected outcome:

The students will be able to

1. Develop the design and practical problem solving skills in the area of mechanisms
2. Understand the basics of vibration and apply the concepts in design problems of mechanisms.

Text Books:

1. Ballaney P.L., Theory of Machines, Khanna Publishers,1994
2. S. S. Ratan, Theory of Machines, Tata McGraw Hill, 2009
3. V. P. Singh, Theory of Machines, Dhanpat Rai,2013

References :

1. E. Wilson, P. Sadler, Kinematics and Dynamics of Machinery, Pearson Education, 2003
2. Ghosh, A. K. Malik, Theory of Mechanisms and Machines, Affiliated East West Press, 2003
3. H. Myszka, Machines and Mechanisms Applied Kinematic Analysis, Pearson Education, 4e, 2011
4. Hortovenko, Dynamics of Machinery, John Wiley, 1995
5. J. E. Shigley, J. J. Uicker, Theory of Machines and Mechanisms, McGraw Hill,1995
6. W. T. Thompson, Theory of vibration, Prentice Hall,1997

NEHRU COLLEGE OF ENGINEERING & RESEARCH CENTRE
THIRUVILWAMALA, THRISSUR DT

PRINCIPAL
Nehru College of Engineering and Research Centre
Thirumalayampathy, Thiruvilwamala, Thrissur Dt

Course Plan			
Module	**Contents**	**Hours**	**End Sem. Exam Marks**
I	Introduction to force analysis in mechanisms - static force analysis (four bar linkages only) - graphical methods	4	15%
	Matrix method - method of virtual work - analysis with sliding and pin joints	3	
II	Dynamic force analysis. Inertia force and inertia torque. D'Alemberts principle - analysis of mechanisms (four bar linkages only), equivalent dynamical systems	4	15%
	Force analysis - spur- helical - bevel and worm gearing	3	
FIRST INTERNAL EXAM			
III	Flywheel analysis - balancing - static and dynamic balancing - balancing of masses rotating in several planes	4	15%
	Balancing of reciprocating masses - balancing of multi-cylinder in line engines - V engines - balancing of machines	3	
IV	Gyroscopic - gyroscopic couples	3	15%
	Gyroscopic action on vehicles-two wheelers, four wheelers, air planes and ships - stability of an automobile – stability of a two wheel vehicle –Stabilization of ship.	4	
SECOND INTERNAL EXAM			
V	Introduction to vibrations – free vibrations of single degree freedom systems - energy Method	2	20%
	Undamped and damped free vibrations – viscous damping – critical damping - logarithmic decrement - Coulomb damping – harmonically excited vibrations	3	
	Response of an undamped and damped system – beat phenomenon - transmissibility	2	
VI	Whirling of shafts – critical speed - free torsional vibrations – self excited and stability analysis - vibration control - vibration isolation – vibration absorbers	4	20%
	Introduction to multi-degree freedom systems - vibration measurement - accelerometer – seismometer – vibration exciters	3	
END SEMESTER EXAM			

NEHRU COLLEGE OF ENGINEERING & RESEARCH CENTRE
Pampady
Thiruvilvamala
Thrissur

PRINCIPAL
Nehru College of
Engineering and Research Centre
Pampady, Thiruvilvamala, Thrissur Dt
Pin - 680 597, Kerala

Question Paper Pattern

Maximum marks: 100 **Time: 3 hrs**

The question paper should consist of three parts

Part A
There should be 2 questions each from module I and II
Each question carries 10 marks
Students will have to answer any three questions out of 4 (3X10 marks =30 marks)

Part B
There should be 2 questions each from module III and IV
Each question carries 10 marks
Students will have to answer any three questions out of 4 (3X10 marks =30 marks)

Part C
There should be 3 questions each from module V and VI
Each question carries 10 marks
Students will have to answer any four questions out of 6 (4X10 marks =40 marks)

Note: Each question can have a maximum of four sub questions, if needed.

NEHRU COLLEGE OF ENGINEERING & RESEARCH CENTRE
THIRUVALAMALA
THRISSUR-DT

PRINCIPAL
Nehru College of
Engineering and Research Centre
Pampady, Thiruvalamala, Thrissur Dt
Pin - 680 597, Kerala

Course code	Course Name	L-T-P-Credits	Year of Introduction
ME306	ADVANCED MANUFACTURING TECHNOLOGY	3-0-0-3	2016

Pre requisite: ME 220 Manufacturing Technology, ME303 Machine Tools and Digital Manufacturing

Course Objectives

1. To introduce machining principles and processes in the manufacturing of precision components and products that use conventional and nonconventional technologies.
2. To give basic understanding of the machining capabilities, limitations, and productivity of advanced manufacturing processes.
3. To describe how PLC's operate and how they control automated equipment and systems
4. To demonstrate tool path simulations with CNC powered equipment
5. To introduce CNC programming

Syllabus:-

Powder Metallurgy- Programmable Logic Controllers- CNC- non-traditional and micro machining process - high velocity forming of metals-material additional process.

Expected outcome:

The students will be able to

i. Become conversant with the non- traditional machining process and to appreciate the effect of process parameters on the surface integrity aspects during the non- traditional machining process.
ii. Appreciate the use of an EDM as a non traditional method of machining complex and hard materials.
iii. Prescribe a laser materials processing technique suitable for a given product with material, size, precision, and surface quality requirements.
iv. Program and operate a CNC mill and lathe.
v. Select the tool material and machining process parameters.

Text books/References

1. ASTME, High velocity forming of metals, PHI, 1968.
2. Davies K and Austin E.R, Developments in high speed metal forming, the machinery publishing Co, 1970.
3. Ibrahim Zeid, R Sivasubrahmanian CAD/CAM: Theory & Practice, McGraw Hill Education, 2009
4. Jain V.K., Introduction to Micromachining, Narosa publishers,2014
5. M.P. Groover, E.M. Zimmers, Jr. CAD/CAM; Computer Aided Design and Manufacturing, Prentice Hall of India, 1987
6. Petruzella Frank.D., Programmable logic controllers,McGraw Hill,2016
7. Yoram Koren, Computer control of manufacturing systems, TMH,2006

NEHRU COLLEGE OF ENGINEERING & RESEARCH CENTRE

PRINCIPAL
Nehru College of
Engineering and Research Centre
Pampady, Thiruvilwamala, Thrissur Dt
Pin - 680 597, Kerala

Course Plan			
Module	**Contents**	**Hours**	**End Sem. Exam. Marks**
I	Introduction: Need and comparison between traditional, non-traditional and micro & nano machining process.	1	15%
	Powder Metallurgy: Need of P/M - Powder Production methods:- Atomization, electrolysis, Reduction of oxides, Carbonyls (Process parameters, characteristics of powder produced in each method).	1	
	Powder characteristics: properties of fine powder, size, size distribution, shape, compressibility, purity etc.	1	
	Mixing – Compaction:- techniques, pressure distribution, HIP & CIP.	1	
	Mechanism of sintering, driving force for pore shirking, solid and liquid phase sintering - Impregnation and Infiltration Advantages, disadvantages and specific applications of P/M.	1	
	Programmable Logic Controllers (PLC): need – relays - logic ladder program –timers, simple problems only.	1	
	Point to point, straight cut and contouring positioning - incremental and absolute systems – open loop and closed loop systems - control loops in contouring systems: principle of operation.	1	
II	DDA integrator:-Principle of operation, exponential deceleration –liner, circular and complete interpolator.	1	15%
	NC part programming: part programming fundamentals - manual programming –	1	
	NC coordinate systems and axes — sequence number, preparatory functions, dimension words, speed word, feed world, tool world, miscellaneous functions –	1	
	Computer aided part programming:– CNC languages – APT language structure: geometry commands, motion	1	
	commands, postprocessor commands, compilation control commands	1	
	Programming exercises: simple problems on turning and drilling etc - machining centers- 5 axis machining (***At least one programming exercise must be included in the end semester University examination).***	2	
	FIRST INTERNAL EXAMINATION		

NEHRU COLLEGE OF ENGINEERING & RESEARCH CENTRE
PRINCIPAL
Nehru College of Engineering and Research Centre

III	Electric Discharge Machining (EDM):- Mechanism of metal removal, dielectric fluid, spark generation, recast layer and attributes of process characteristics on MRR, accuracy, HAZ etc, Wire EDM, applications and accessories.	3	15%
	Ultrasonic Machining (USM):-mechanics of cutting, effects of parameters on amplitude, frequency of vibration, grain diameter, slurry, tool material attributes and hardness of work material, applications.	2	
	Electro chemical machining (ECM):- Mechanism of metal removal attributes of process characteristics on MRR, accuracy, surface roughness etc, application and limitations.	1	
IV	Laser Beam Machining (LBM), Electron Beam Machining (EBM), Plasma arc Machining (PAM), Ion beam Machining(IBM) - Mechanism of metal removal, attributes of process characteristics on MRR, accuracy etc and structure of HAZ compared with conventional process; application, comparative study of advantages and limitations of each process.	3	15%
	Abrasive Jet Machining (AJM), Abrasive Water Jet Machining **(AWJM)** - Working principle, Mechanism of metal removal, Influence of process parameters, Applications, Advantages & disadvantages.	3	
	SECOND INTERNAL EXAMINATION		
V	High velocity forming of metals:-effects of high speeds on the stress strain relationship steel, aluminum, Copper – comparison of conventional and high velocity forming methods- deformation velocity, material behavior, stain distribution.	3	20%
	Stress waves and deformation in solids – types of elastic body waves- relation at free boundaries- relative particle velocity.	2	
	Sheet metal forming: - explosive forming:-process variable, properties of explosively formed parts, etc.	2	
	Electro hydraulic forming: - theory, process variables, etc, comparison with explosive forming.	1	
V1	Micromachining: Diamond turn mechanism, material removal mechanism, applications.	1	20%
	Advanced finishing processes: - Abrasive Flow Machining, Magnetic Abrasive Finishing.	2	
	Magnetorheological Abrasive Flow Finishing, Magnetic Float Polishing, Elastic Emission Machining.	3	
	Material addition process:- stereo-lithography, selective laser sintering, 3D Printing, fused deposition modeling, laminated object manufacturing, , laser engineered net-shaping, laser welding, LIGA process.	2	

NEHRU COLLEGE OF ENGINEERING & RESEARCH CENTRE THIRUVILWAMALA THRISSUR

PRINCIPAL
Nehru College of
Engineering and Research Centre

Question Paper Pattern

Maximum marks: 100 **Time: 3 hrs**

The question paper should consist of three parts

Part A
There should be 2 questions each from module I and II
Each question carries 10 marks
Students will have to answer any three questions out of 4 (3X10 marks =30 marks)

Part B
There should be 2 questions each from module III and IV
Each question carries 10 marks
Students will have to answer any three questions out of 4 (3X10 marks =30 marks)

Part C
There should be 3 questions each from module V and VI
Each question carries 10 marks
Students will have to answer any four questions out of 6 (4X10 marks =40 marks)

Note: Each question can have a maximum of four sub questions, if needed.

APJ ABDUL KALAM TECHNOLOGICAL UNIVERSITY
KTU
Estd. 2014
NEHRU COLLEGE OF ENGINEERING & RESEARCH CENTRE THIRUVILWAMALA THRISSUR
PRINCIPAL
Nehru College of Engineering and Research Centre
Pampady Thiruvilwamala, Thrissur Dt
Pin 680 597 Kerala

Course code	Course Name	L-T-P-Credits	Year of Introduction
ME308	COMPUTER AIDED DESIGN AND ANALYSIS	3-0-0-3	2016

Prerequisite: ME201 Mechanics of solids

Course Objectives:

1. To impart basic knowledge on Computer Aided Design methods and procedures
2. To introduce the fundamentals of solid modelling
3. To introduce the concepts of finite element analysis procedures.

Syllabus

Introduction to CAD/CAM, Basics of geometric and solid modeling, transformation, representation points, lines, surfaces and solid models. Introduction to finite element analysis, solution procedures, interpolation, isoparametric formulation, applications.

Expected outcome:

The students will be able to

1. Gain a basic knowledge on Computer Aided Design methods and procedures
2. Understand the fundamentals of solid modelling
3. Have a basic knowledge in finite element analysis procedures.

Text Books:

1. M.P. Groover, E.M. Zimmers, Jr.CAD/CAM; Computer Aided Design and Manufacturing, Prentice Hall of India, 1987
2. T. R. Chandrupatla and A. D. Belagundu, Introduction to Finite Elements in Engineering, Pearson Education, 2001

References:

1. Chris Mcmahon and Jimmie Browne - CAD/CAM – Principle Practice and Manufacturing Management, Addision Wesley England,1998
2. D. F. Rogers and J. A. Adams, Mathematical Elements in Computer Graphics, McGraw-Hill,1990
3. Daryl Logan, A First course in Finite Element Method, Thomson Learning,2007
4. David V Hutton, Fundamentals of Finite Element Analysis, THM,2003
5. Donald Hearn, M. Pauline Baker and Warren Carithers, Computer Graphics with open GL, Pearson Education,2001
6. Grigore Burdea, Philippe Coiffet, Virtual Reality Technology, John Wiley and sons,2003
7. Ibrahim Zeid, CAD/ CAM Theory and Practice, McGraw Hill,2007
8. P. Radhakrishnan and S. Subramanyan, CAD / CAM / CIM, New Age Int. Ltd.,2008

NEHRU COLLEGE OF ENGINEERING & RESEARCH CENTRE

PRINCIPAL
Nehru College of Engineering and Research Centre

Course Plan			
Module	**Contents**	**Hours**	**End Sem. Exam Marks**
I	Introduction to CAD , Historical developments, Industrial look at CAD, Comparison of CAD with traditional designing, Application of computers in Design	2	15%
	Basics of geometric and solid modeling, Packages for CAD/CAM/CAE/CAPP	1	
	Hardware in CAD components, user interaction devices, design database, graphic Standards, data Exchange Formats, virtual Reality.	4	
II	Transformation of points and line, 2-D rotation, reflection, scaling and combined transformation, homogeneous coordinates, 3-D scaling.	4	15%
	Shearing,rotation, reflection and translation, combined transformations, orthographic and perspective projections, reconstruction of 3-D objects.	3	
FIRST INTERNAL EXAM			
III	Algebraic and geometric forms, tangents and normal, blending functions, reparametrization, straight lines, conics, cubic splines, Bezier curves and B-spline curves.	4	15%
	Plane surface, ruled surface, surface of revolution, tabulated cylinder, bi-cubic surface, bezier surface, B-spline surfaces and their modeling techniques.	3	
IV	Solid models and representation scheme, boundary representation, constructive solid geometry.	3	15%
	Sweep representation, cell decomposition, spatial occupancy enumeration, coordinate systems for solid modeling.	4	
SECOND INTERNAL EXAM			
V	Introduction to finite element analysis - steps involved in FEM- Preprocessing phase – discretisation - types of elements	2	20%
	Formulation of stiffness matrix (direct method, 1-D element) - formulation of load vector - assembly of global equations - implementation of boundary conditions - solution procedure - post processing phase	3	
	Simple problems with axial bar element (structural problems only)	2	
VI	Interpolation – selection of interpolation functions - CST element - isoparametric formulation (using minimum PE theorem) – Gauss-quadrature	4	20%

NEHRU COLLEGE OF ENGINEERING & RESEARCH CENTRE
LIBRARY
THIRUVILWAMALA
THRISSUR

PRINCIPAL
Nehru College of
Engineering and Research Centre
Pampady, Thiruvilwamala, Thrissur Dt
Pin - 680 597, Kerala

	Solution of 2D plane stress solid mechanics problems (linear static analysis)	3	
END SEMESTER EXAM			

Question Paper Pattern

Maximum marks: 100 **Time: 3 hrs**

The question paper should consist of three parts

Part A
There should be 2 questions each from module I and II
Each question carries 10 marks
Students will have to answer any three questions out of 4 (3X10 marks =30 marks)

Part B
There should be 2 questions each from module III and IV
Each question carries 10 marks
Students will have to answer any three questions out of 4 (3X10 marks =30 marks)

Part C
There should be 3 questions each from module V and VI
Each question carries 10 marks
Students will have to answer any four questions out of 6 (4X10 marks =40 marks)

Note: Each question can have a maximum of four sub questions, if needed.

Estd. 2014

NEHRU COLLEGE OF ENGINEERING & RESEARCH CENTRE
Pampady
THIRUVILWAMALA
THRISSUR-DT

PRINCIPAL
Nehru College of
Engineering and Research Centre
Pampady, Thiruvilwamala, Thrissur Dt
Pin - 680 597, Kerala

Course code	Course Name	L-T-P-Credits	Year of Introduction
ME312	METROLOGY AND INSTRUMENTATION	3-0-0-3	2016

Prerequisite: Nil

Course Objectives:

- To understand the working of linear and angular measuring instruments.
- To familiarize with the working of optical measuring instruments and fundamentals of limits and limit gauges.
- To give basic idea about various methods for measurement of screw thread and surface finish parameters.
- To give an exposure to advanced measuring devices and machine tool metrology.
- To provide students an overview of mechanical measurement systems and principle of instruments for motion and dimension measurement.
- To provide basic idea about working principle and applications of devices for measurement of force and torque; strain and stress and temperature.

Syllabus

Introduction to Metrology - Errors in Measurement- Basic standards of length - Linear Measurement, Comparators - Angular Measurement - Limits and Limit gauges - Optical Measuring Instruments - Screw thread measurement - Measurement of surface texture - Machine tool metrology - Coordinate Measuring Machine (CMM) and Machine Vision.
Introduction to Mechanical Measurement - Motion and Dimension measurement, Strain and Stress Measurement - Measurement of Force, Torque and Temperature Measurement.

Expected outcome:

The students will be able to

i. Understand the working of linear and angular measuring instruments.
ii. Know the fundamentals of limits and limit gauges, various methods for measurement of screw thread and surface roughness parameters and the working of optical measuring instruments.
iii. Get an exposure to advanced measuring devices and machine tool metrology.
iv. Acquire an overview of mechanical measurement systems and principle of instruments for motion and dimension measurement.
v. Get basic idea about working principle and applications of devices for measurement of force and torque; strain and stress and temperature.

Text books

1. Anand K Bewoor, Vinay A Kulkarni, Metrology & Measurement, McGraw-Hill, 2009
2. Ernest O. Doebelin, Dhanesh N. Manik, Measurement Systems Application and Design, McGraw-Hill, 2004
3. Galyer J.F.W., Schotbolt C.R., Metrology for Engineers, ELBS,1990
4. Thomas G. Beckwith, John H. L., Roy D. M., Mechanical Measurements, 6/E , Pearson Prentice Hall, 2007

NEHRU COLLEGE OF ENGINEERING & RESEARCH CENTRE
THIRUVALLA, THRISSUR
PRINCIPAL
Nehru College of Engineering and Research Centre

Reference books

1. ASME, Hand book of Industrial Metrology,1998
2. Hume K. J., Engineering Metrology, Macdonald &Co. Ltd.,1990
3. J.P.Holman, Experimental Methods for Engineers,Mcgraw-Hill, 2007
4. Sharp K.W.B., Practical Engineering Metrology, Sir Isaac Pitman & Sons Ltd.,1958

Course Plan

Module	Contents	Hours	End Sem. Exam. Marks
I	Concept of measurement:-Introduction to Metrology; Need for high precision measurements; Terminologies in Measurement-Precision, accuracy, sensitivity, calibration.	1	15%
	Errors in Measurement, types of errors, Abbe's Principle.	1	
	Basic standards of length- Line standard, End standards, Wavelength standard; Various Shop floor standards.	1	
	Linear Measurement – Slip gauges, wringing, grades; Surface plate; Dial indicators; Height gauges and Vernier calipers.	1	
	Comparators- mechanical, electrical, optical and pneumatic.	1	
	Angular Measurement – Bevel protractor; Sine Bar, principle and use of sine bar, sine centre; Angle gauges.	1	
	Sprit level; Angle Dekkor; Clinometers.	1	
II	Limits and Limit gauges – Making to suit, selective assembly, systems of limits and fits; Types of fits; Hole basis system and Shaft basis system.	1	15%
	Standard systems of limits and fits; Shaft and Hole system; Tolerance, allowance and deviation (as per BIS).	1	
	Simple problems on tolerance and allowance, shaft and hole system.	1	
	Limit Gauges – GO and NO GO gauges; types of limit gauges.	1	
	Gauge design - Taylor's principle of gauging; Gauge tolerance, disposition of gauge tolerance, wear allowance.	1	
	Optical Measuring Instruments: - Benefits of using light waves as standards; Monochromatic light; Principle of Interference.	1	
	Interference band using optical flat, application in surface measurement.	1	
	Interferometers – NPL flatness interferometer, Pitter-NPL gauge interferometer.	1	
	FIRST INTERNAL EXAMINATION		
	Screw thread measurement – Screw thread terminology; Measurement of major diameter; Measurement of minor or root diameter.	1	
	Measurement of pitch; Measurement of effective diameter with two wire method and three wire method.	1	
	Measurement of flank angle and form by profile projector and	1	

NEHRU COLLEGE OF ENGINEERING
PRINCIPAL
Nehru College of Engineering and Research Centre

	microscope.		
III	Measurement of surface texture – Meaning of surface texture, roughness and waviness; Analysis of surface traces, peak to valley height, R.M.S. value, Centre Line Average and R_a value, Rt, Rz etc.	1	15%
	Methods of measuring surface roughness – Stylus probe, Tomlinson surface meter, Talysurf; Terms used in surface roughness measurement – assessment length, roughness width cut-off, sampling length and evaluation length.	1	
	Interference method for measuring surface roughness – using optical flat and interferometers.	1	
	Autocollimator, principle and use of autocollimator.	1	
IV	Machine tool metrology – Alignment testing of machine tools like lathe, milling machine, drilling machine.	1	15%
	Advanced measuring devices – Laser interferometers.	1	
	Coordinate Measuring Machine (CMM) – Introduction to CMM; Components and construction of CMM.	1	
	Types of CMM; Advantages and application of CMM	1	
	CMM probes, types of probes – contact probes and non contact probes	1	
	Machine Vision – Introduction to machine vision, functions, applications and advantages of machine vision.	1	
	Steps in machine vision	1	
	SECOND INTERNAL EXAMINATION		
V	Introduction to Mechanical Measurement – significance of mechanical measurement; Fundamental methods of measurement; Classification of measuring instrument.	1	20%
	Stages in generalized measuring system – Sensor-Transducer stage, Signal-Conditioning stage, Readout-Recording stage; Types of input quantities; Active and Passive transducers.	1	
	Performance characteristic of measuring devices – Static characteristics – Accuracy, Precision, Repeatability, Sensitivity, Reproducibility, Drift, Resolution, Threshold, Hysteresis, Static calibration.	1	
	Dynamic characteristics- different order systems and their response-, Measuring lag, Fidelity, Dynamic error; Types of errors in measurement.	1	
	Transducers – Working, Classification of transducers.	1	
	Motion and Dimension measurement – LVDT – Principle, applications, advantages and limitations.	1	
V1	Strain and Stress Measurement - Electrical resistance strain gauge - Principle, operation.	1	
	Measurement of Force and Torque – Strain-Gauge Load Cells, Hydraulic and Pneumatic load cells – basic principle and three component force measurement using piezoelectric quartz crystal.	1	
	Torque Measurement – Dynamometers – Mechanical, Hydraulic and Electrical.	1	
	Vibration measurement – Vibrometers and Accelerometers – Basic principles and operation.	1	

NEHRU COLLEGE OF ENGINEERING & RESEARCH CENTRE
PAMPADY THIRUVILWAMALA, THRISSUR-DT

PRINCIPAL
Nehru College of Engineering and Research Centre
Pampady, Thiruvilwamala, Thrissur-Dt.
Kerala

	Temperature Measurement – Use of Thermal Expansion – Liquid-in-glass thermometers, Bimetallic strip thermometer, Pressure thermometers.	1	20%
	Thermocouples – Principle, application laws for Thermocouples, Thermocouple materials and construction, measurement of Thermocouple EMF.	1	
	Resistance Temperature Detectors (RTD); Thermistors; Pyrometers (Basic Principles).	1	
END SEMESTER EXAMINATION			

APJ ABDUL KALAM TECHNOLOGICAL UNIVERSITY

Question Paper Pattern

Maximum marks: 100 **Time: 3 hrs**

The question paper should consist of three parts

Part A
There should be 2 questions each from module I and II
Each question carries 10 marks
Students will have to answer any three questions out of 4 (3X10 marks =30 marks)

Part B
There should be 2 questions each from module III and IV
Each question carries 10 marks
Students will have to answer any three questions out of 4 (3X10 marks =30 marks)

Part C
There should be 3 questions each from module V and VI

Course code	Course Name	L-T-P-Credits	Year of Introduction
ME332	COMPUTER AIDED DESIGN AND ANALYSIS LAB	0-0-3-1	2016

Prerequisite: ME308 Computer aided design and analysis

Course Objectives:

- To provide working knowledge on Computer Aided Design methods and procedures
- To impart training on solid modelling software
- To impart training on finite element analysis software

Syllabus

Introduction to solid modeling and Finite Element Analysis software.

Exercises on modeling and assembly.

a. Creation of higher end 3D solid models.(minimum 3 models)

b. Creation of assembled views of riveted joints, cotter joints and shaft couplings. (minimum 3 models)

Exercises on the application of Finite Element Method/Finite Volume Method to engineering systems:-

a. Structural analysis. (minimum 3 problems)

b. Thermal analysis. (minimum 2 problems)

c. Fluid flow analysis. (minimum 1 problem)

Expected outcome:

The students will be able to

i. Gain working knowledge in Computer Aided Design methods and procedures

ii. Solve simple structural, heat and fluid flow problems using standard software

Points to note:

- Any appropriate solid modeling software (like CATIA, Solids Works, ProE, IDEAS, Siemens Solid Edge and NX, free software, etc.) and package (like ANSYS, Comsol Multi Physics, NASTRAN, ABAQUS, ADINA, Siemens Femap Nastran,free software etc.) may be used.
- **Evaluation**

Class exercises	60 marks
Regular class viva	10 marks
Final internal exam using software	30 marks

All the above three evaluations are mandatory.

References Books:

1. Daryl Logan, A First course in Finite Element Method, Thomson Learning, 2007
2. David V Hutton, Fundamentals of Finite Element Analysis, Tata McGraw Hill,2003
3. Ibrahim Zeid, CAD/ CAM Theory and Practice, McGraw Hill, 2007
4. Mikell P. Groover and Emory W. Zimmer, CAD/ CAM – Computer aided design and manufacturing, Pearson Education,1987
5. T. R. Chandrupatla and A. D. Belagundu, Introduction to Finite Elements in Engineering, Pearson Education, 2012

NEHRU COLLEGE OF ENGINEERING & RESEARCH CENTRE
THRISSUR, DT.

PRINCIPAL
Nehru College of
Engineering and Research Centre
Pampady, Thiruvilwamala, Thrissur Dt

Course code	Course Name	L-T-P-Credits	Year of Introduction
ME334	MANUFACTURING TECHNOLOGY LABORATORY – II	0-0-3-1	2016

Prerequisite: ME312 Metrology and Instrumentation

Course Objectives:

- To provide programming practice on CNC machine tools
- To impart knowledge on the fundamental concepts and principles of metrology
- To explain the need of various modern measuring instruments and precision measurements

List of Experiments/Exercises:	Sessions
Exercise on grinding machine	1
Study and preparation of program, simulation and exercise on CNC lathe:-turning, step turning, taper turning, thread cutting, ball and cup turning etc.	2
Study and preparation of program, simulation and exercise on CNC milling machine: - surface milling, pocket milling, contour milling etc.	2
Basics for mechanical measurements Calibration of vernier caliper, micrometer and dial gauge etc. Determination of dimensions of given specimen using vernier caliper, micrometer, height gauge, bore dial gauge etc. Determination of dimensions of a rectangular, square, cylindrical specimens using slip gauges and comparing with height gauge/vernier caliper etc	1
Experiments on Limits, Fits and Tolerance Determine the class of fits between given shaft and hole. etc.	
Linear measurements Study of different linear measuring instruments. Calibration of LVDT using slip gauges.	1
Straightness error measurement Study of different straightness error measuring instruments – basic principle of auto collimator and spirit level. Measurement of straightness error of a CI surface plate using auto collimator and comparing with sprit level. laser interferometer used to determine straightness error To check straightness error of a straight edge by the wedge method using slip gauges.	1
Angle measurements Angular measurements using bevel protractor, combination sets, clinometers, angle dekkor etc. Measurement of angle and width of a V-block and comparing with combination sets. Measurement of angle using sine bar of different samples.	1

PRINCIPAL
Nehru College of
Engineering and Research Centre

Out of roundness measurement Study of different methods used for measurement out of roundness Measurement of out of roundness using form measuring instrument Measurement of out of roundness using V-block and dial gauge Measurement of out of roundness using bench centre and dial gauge etc.	1
Screw thread measurement Measurement of screw thread parameters using two wire and three wire method. Measurement of screw thread parameters using tool maker's microscope etc. Measurement of screw thread parameters using thread ring gage, thread plug gage, thread snap gage, screw thread micrometer, optical comparator etc.	1
Bore measurement Measurement of a bore by two ball method. Measurement of a bore by four ball method. Bore measurement using slip gauges and rollers. Bore measurement using bore dial gauge etc.	1
Calibration and determination of uncertainties Strain measurement using strain gauge load cells. Calibration of a cantilever strain gauge load cell. **Rotation measurement** Determination of rpm using tachometer, optical tachometer and stroboscope, etc.	1
Area determination Study of planimeter and Green's theorem Determination of given irregular area using planimeter.	1
Gear metrology Types of gears – gear terminology – gear errors - study of Profile Projector. Measurement of profile error and gear parameters using profile projector etc. **Use of Comparators** Exercise on comparators: mechanical, optical, pneumatic and electronic comparators.	1
Use of Tool makers microscope Study of tool maker's microscope – use at shop floor applications. Measurement of gear tooth parameters using tool maker's microscope. Measurement of different angles of single point cutting tool using tool maker's microscope.	1
Surface roughness measurement Measurement of surface roughness using surface profilometer /roughness measuring machine of turned, milled, grounded, lapped and glass etc specimens.	1
Squareness measurement Determination of squareness of a trisquare using angle plate and slip gauges.	1
Flatness measurement Study of optical flat and variation of fringe patterns for different surfaces. Determination of parallelism error between micrometer faces. Compare given surface using optical flat with interpretation chart.	1
Vibration measurement Measurement of displacement, velocity and acceleration of vibration.	1

NEHRU COLLEGE OF ENGINEERING RESEARCH CENTRE
THIRUVALAMALA, THRISSUR, DT.
PRINCIPAL
Nehru College of
Engineering and Research Centre

Use of Pneumatic comparator Checking the limits of dimensional tolerances using pneumatic comparator Calibration using air plug gauge etc	**1**

Reference books

1. Collett, C.V. and Hope, A.D, Engineering Measurements, Second edition, ELBS/Longman,1983
2. Sharp K.W.B. and Hume, Practical Engineering Metrology, Sir Isaac Pitman and sons Ltd, London,1958
3. Shotbolt C.R. and Gayler J.F.W, Metrology for Engineers, 5th edition, ELBS, London,1990
4. Yoram Koren, Numerical Control of Machine Tools, McGraw-Hill,1983

A minimum of 12 experiments are mandatory but the experiments/exercises in CNC machines are mandatory.

The academic evaluation shall be carried out by faculty.

NEHRU COLLEGE OF ENGINEERING & RESEARCH CENTRE
Pampady
THIRUVILWAMALA
THRISSUR-DT.

PRINCIPAL
Nehru College of
Engineering and Research Centre
Pampady Thiruvilwamala, Thrissur Dt
Pin 680 597 Kerala

Course code	Course Name	L-T-P-Credits	Year of Introduction
ME401	DESIGN OF MACHINE ELEMENTS - I	3-1-0-4	2016

Prerequisite: ME201 Mechanics of Solids

Course Objectives:

- To review concepts of statics and strength of materials.
- To introduce fundamental approaches to failure prevention of components.
- To provide knowledge in the design of common machine elements such as fasteners, shafts, springs cotter joints and couplings.

Syllabus

Introduction to Design, Materials and their properties, Theories of Failure, Shock and impact loads.Threaded Joints, Bolted joints, Design of riveted joints, Cotter and Knuckle joints, Design of welded joints, Helical springs, Leaf springs, Shafting, Design of Coupling.

Expected outcome:

The students will be able to

i. Find out various stresses induced in a machine element under different type of loading conditions.

ii. Devise machine components for its conceptual design.

Text Books:

1. Jalaludeen , Machine Design, Anuradha Publications, Chennai,2014
2. R. L. Norton, Machine Design – An Integrated Approach, Pearson Education, 2001
3. V.B.Bhandari, Design of Machine elements, McGraw Hill, 2010

Data books permitted for reference in the final examination:

1. K. Mahadevan, K.Balaveera Reddy, Design Data Hand Book, CBS Publishers & Distributors, 2013
2. NarayanaIyengar B.R & Lingaiah K, Machine Design Data Handbook, Tata McGraw Hill/Suma Publications, 1984
3. PSG Design Data, DPV Printers, Coimbatore, 2012

References Books:

1. J. E. Shigley, Mechanical Engineering Design, McGraw Hill,2003
2. Juvinall R.C & Marshek K.M., Fundamentals of Machine Component Design, John Wiley,2003
3. M. F. Spotts, T. E. Shoup, Design of Machine Elements, Pearson Education, 2006
4. Rajendra Karwa, Machine Design, Laxmi Publications,2006

NEHRU COLLEGE OF ENGINEERING & RESEARCH CENTRE PAMPADY THIRUVILWAMALA, THRISSUR DT

PRINCIPAL
Nehru College of
Engineering and Research Centre

Course Plan			
Module	**Contents**	**Hours**	**End Sem. Exam Marks**
I	Introduction to Design- Definition, steps in design process, preferred numbers, standards and codes in design	4	15%
	Materials and their properties- Elastic and plastic behaviour of metals, ductile and brittle behaviour, shear, bending and torsional stresses, combined stresses, stress concentration factor.	5	
II	Theories of Failure- Guest's Theory, Rankine's Theory, St. Venant's Theory, Haigh's Theory, and Von Mises and Hencky Theory.	5	15%
	Shock and impact loads, fatigue loading, endurance limit stress, factors affecting endurance limit, factor of safety	6	
FIRST INTERNAL EXAM			
III	Threaded Joints- Terminology, thread standards, types of threads, stresses in screw threads	3	15%
	Bolted joints- effect of initial tension, eccentric loading, design of bolts for static and fatigue loading, gasketed joints, power screws	4	
IV	Design of riveted joints- Material for rivets, modes of failure, efficiency of joint, design of boiler and tank joints, structural joints	4	15%
	Cotter and Knuckle joints- Gib and Cotter Joint, analysis of knuckle joint.	4	
	Design of welded joints- welding symbols, stresses in fillet and butt welds, Butt joint in tension, fillet weld in tension, fillet joint under torsion, fillet wed under bending, eccentrically loaded welds.	4	
SECOND INTERNAL EXAM			
V	Springs- classification, spring materials, stresses and deflection of helical springs, axial loading, curvature effect, resilience, static and fatigue loading, surging, critical frequency, concentric springs, end construction.	5	20%
	Leaf springs- Flat springs, semi elliptical laminated leaf springs, design of leaf springs, nipping	4	
VI	Shafting- material, design considerations, causes of failure in shafts, design based on strength, rigidity and critical speed, design for static and fatigue loads, repeated loading, reversed bending	5	20%
	Design of Coupling- selection, classification, rigid and flexible coupling, design of keys and pins	3	
END SEMESTER EXAM			

NEHRU COLLEGE OF ENGINEERING & RESEARCH CENTRE
PAMPADY
THIRUVILWAMALA
THRISSUR DT

PRINCIPAL
Nehru College of
Engineering and Research Centre
Pampady, Thiruvilwamala, Thrissur (Dt)
Pin - 680 597, Kerala

Question paper pattern

Use of approved data book permitted

Maximum marks: 100 **Time: 3**

The question paper should consist of three parts

Part A

There should be 3 questions from module I and II and at least 1 question from each mod
Each question carries 15 marks
Students will have to answer any 2 questions out of 3 (2X15 marks =30 marks)

Part B

There should be 3 questions from module III and IV and at least 1 question from each m
Each question carries 15 marks
Students will have to answer any 2 questions out of 3 (2X15 marks =30 marks)

Part C

There should be 3 questions from module V and VI and at least 1 question from each m
Each question carries 20 marks
Students will have to answer any 2 questions out of 3 (2X20 marks =40 marks)

Note: Each question can have a maximum of four sub questions, if needed.

Course code	Course Name	L-T-P-Credits	Year of Introduction
ME403	ADVANCED ENERGY ENGINEERING	3-0-0-3	2016

Prerequisite: Nil

Course Objectives:

1. To give an idea about global energy scenario and conventional energy sources
2. To understand solar, wind and Biomass energy
3. To know concepts of other renewable energy sources
4. To create awareness on the impacts of energy conversion and importance of sustainable energy

Syllabus

Global and Indian energy scenario, conventional energy sources, environmental effect of energy conversion, renewable energy sources- solar, wind, biomass, brief account of other renewable energy sources –geothermal, tidal, MHD, hydrogen, fuel cells, small scale hydro power plants. Environmental impact and Sustainability issues.

Expected outcome:

The students will be able to

i. Understand energy scenario and the environmental effects of energy conversion.
ii. Become aware of different renewable energy sources and choose sustainable energy for

Text Books:

1. Jefferson W Tester et.al., Sustainable Energy: Choosing Among Options, PHI, 2006
2. P K Nag, Power Plant Engineering, TMH, 2002
3. Tiwari G N, Ghosal M K, Fundamentals of renewable energy sources, Alpha Science International Ltd., 2007

References Books:

1. David Merick, Richard Marshall, Energy, Present and Future Options, Vol.I & II, John Wiley & Sons, 2001
2. Godfrey Boyle, Renewable Energy : Power for a Sustainable Future, Oxford University Press, 2012
3. Roland Wengenmayr, Thomas Buhrke, 'Renewable Energy: Sustainable energy concepts for the future, Wiley – VCH, 2012
4. Twidell J W and Weir A D, Renewable Energy Resources, UK, E&F.N. Spon Ltd., 2006

Course Plan

Module	Contents	Hours	End Sem. Exam Marks
I	Introduction to the course. Global and Indian energy resources. Energy Demand and supply. Components, layout and working principles of steam, hydro, nuclear, gas turbine and diesel power plants	7	15%
II	Solar Energy- passive and active solar thermal energy, solar collectors, solar thermal electric systems, solar photovoltaic systems. Economics of solar power. Sustainability attributes.	7	15%
	FIRST INTERNAL EXAM		

NEHRU COLLEGE OF ENGINEERING & RESEARCH CENTRE
Library
THRUVILWAMALA
THRISSUR-DT

PRINCIPAL
Nehru College of
Engineering and Research Centre
Thiruvilwamala, Thrissur Dt
Pin - 680 597, Kerala

III	Wind Energy-Principle of wind energy conversion system, wind data and energy estimation, wind turbines, aerodynamics of wind turbines, wind power economics. Introduction to solar-wind hybrid energy systems	7	15%
IV	Biomass Energy – Biomass as a fuel, thermo-chemical, bio-chemical and agro-chemical conversion of biomass- pyrolysis, gasification, combustion and fermentation, transesterification, economics of biomass power generation, future prospects.	6	15%
SECOND INTERNAL EXAM			
V	Other Renewable Energy sources – Brief account of Geothermal, Tidal , Wave, MHD power generation, Small, mini and micro hydro power plants. Fuel cells – general description, types, applications. Hydrogen energy conversion systems, hybrid systems- Economics and technical feasibility	8	20%
VI	Environmental impact of energy conversion – ozone layer depletion, global warming, greenhouse effect, loss of biodiversity, eutrophication, acid rain, air and water pollution, land degradation, thermal pollution, Sustainable energy, promising technologies, development pathways	7	20%
END SEMESTER EXAM			

Question Paper Pattern

Maximum marks: 100 **Time: 3 hrs**

The question paper should consist of three parts

Part A
There should be 2 questions each from module I and II
Each question carries 10 marks
Students will have to answer any three questions out of 4 (3X10 marks =30 marks)

Part B
There should be 2 questions each from module III and IV
Each question carries 10 marks
Students will have to answer any three questions out of 4 (3X10 marks =30 marks)

Part C
There should be 3 questions each from module V and VI
Each question carries 10 marks
Students will have to answer any four questions out of 6 (4X10 marks =40 marks)

Note: Each question can have a maximum of four sub questions, if needed.

NEHRU COLLEGE OF ENGINEERING & RESEARCH CENTRE
PAMPADY THIRUVILWAMALA THRISSUR DT

PRINCIPAL
Nehru College of Engineering and Research Centre
Pampady, Thiruvilwamala, Thrissur Dt
Pin - 680 597, Kerala

Course code	Course Name	L-T-P-Credits	Year of Introduction
ME 405	REFRIGERATION AND AIR CONDITIONING	2-1-0-3	2016

Prerequisite: ME205 Thermodynamics

Course Objectives:

1. To introduce vapour compression and vapour adsorption systems
2. To impart knowledge on refrigeration cycles and methods to improve performance
3. To familiarize the components of refrigeration systems
4. To introduce air conditioning systems
5. To know the applications of refrigeration and air conditioning systems

Syllabus

Introduction, Thermodynamics of refrigeration, Air refrigeration systems, Vortex tube refrigeration, Adiabatic demagnetization of paramagnetic salts, Vapour compression systems, Refrigerants and their properties, Application of refrigeration, Refrigeration system components, Air conditioning, Psychrometry, Air conditioning systems.

Expected outcome:

The students will be able to

i. Understand the principles refrigeration of air-conditioning and basic design considerations.
ii. Carry out analysis of refrigeration cycles
iii. Apply the concepts of indoor environmental comfort.
iv. Perform psychrometric calculations, humidity control and analysis of air-conditioning processes
v. Know the various applications of Refrigeration and air conditioning

Text Books:

1. Arora C. P, Refrigeration and Air-Conditioning, McGraw-Hill, 2008
2. Arora S. C. and Domkundwar, Refrigeration and Air-Conditioning, Dhanpat Rai, 2010
3. Ballaney P. L, Refrigeration and Air-Conditioning, Khanna Publishers, New Delhi, 2014
4. Manohar Prasad, Refrigeration and Air-Conditioning, New Age International, 2011

References Books:

1. ASHRAE Handbook
2. Dossat. R. J, Principles of Refrigeration, Pearson Education India, 2002
3. Stoecker W.F, Refrigeration and Air-Conditioning, McGraw-Hill Publishing Company, 2009

Course Plan

Module	Contents	Hours	Sem. Exam Marks
I	Introduction – Brief history and applications of refrigeration. Thermodynamics of refrigeration- reversed Carnot cycle- heat pump and refrigeration machines, Limitations of reversed Carnot cycle. Unit of refrigeration- Air refrigeration systems- Reversed Joule cycle, Air craft refrigeration systems, simple bootstrap- Regenerative and reduced ambient system	6	15%

NEHRU COLLEGE OF ENGINEERING & RESEARCH CENTRE
THIRUVILWAMALA, THRISSUR DT

PRINCIPAL
Nehru College of
Engineering and Research Centre

II	Vortex tube refrigeration-Very low temperature refrigeration systems (concept only). Adiabatic demagnetization of paramagnetic salts Vapour compression systems-simple cycle - representation on T- s and P- h Diagrams. COP- Effect of operating parameters on COP – methods of improving COP of simple cycle- super- heating , under cooling, Liquid suction heat exchanger, actual cycle.	8	15%
	FIRST INTERNAL EXAM		
III	Multi pressure systems - multi compression and multi evaporator, systems. Inter cooling - flash inter cooling and flash gas removal- Different combinations of evaporator and compressor for different applications, Cascade system Refrigerants and their properties-Eco-friendly Refrigerants, mixed refrigerants, selection of refrigerants for different applications Vapour absorption systems - Ammonia – water system - simple system- drawbacks-Lithium Bromide water system- Electrolux-comparison with vapour compression system- steam jet refrigeration.	7	15%
IV	Application of refrigeration- domestic refrigerators- water coolers-ice plants. Cold storages- food preservation methods- plate freezing , quick-freezing. Refrigeration system components- Compressors, condensers, expansion devices, evaporators. Cooling towers- Different types and their application fields- Refrigerant leakage and detection – charging of refrigerant – system controls.	6	15%
	SECOND INTERNAL EXAM		
V	Air conditioning – meaning and utility, comfort and industrial air conditioning. Psychometric properties- saturated and unsaturated air, dry, wet and dew point temperature – humidity, specific humidity, absolute humidity, relative humidity and degree of saturation-thermodynamic equations- enthalpy of moisture- adiabatic saturation process -psychrometers. Thermodynamic wet bulb temperature, psychometric chart- Psychometric processes- adiabatic mixing-sensible heating and cooling- humidifying and dehumidifying, air washer – bypass factor- sensible heat factor-RSHF and GSHF line-Design condition- Apparent dew point temperature – Choice of supply condition, state and mass rate of dehumidified air quantity – Fresh air supplied –air refrigeration. Comfort air conditioning- factors affecting human comfort. Effective temperature – comfort chart. Summer air conditioning- factors affecting-cooling load estimation.	8	20%
VI	Air conditioning systems- room air conditioner- split system-packaged system-all air system-chilled water system. Winter air conditioning – factors affecting heating system, humidifiers. Year round air conditioning AC system controls-thermostat and humidistat. Air distribution systems- duct system and design- Air conditioning of restaurants, hospitals, retail outlets, computer center, cinema theatre, and other place of amusement. Industrial applications of air conditioning.	7	20%
	END SEMESTER EXAM		

NEHRU COLLEGE OF ENGINEERING & RESEARCH CENTRE
THIRUVILWAMALA, THRISSUR-DT.

PRINCIPAL
Nehru College of
Engineering and Research Centre
Thirupady, Thiruvilwamala, Thrissur Dt
Pin - 680 597, Kerala

Question Paper Pattern

Use of approved Refrigerant tables permitted

Maximum marks: 100 **Time: 3 hrs**

The question paper should consist of three parts

Part A
There should be 2 questions each from module I and II
Each question carries 10 marks
Students will have to answer any three questions out of 4 (3X10 marks =30 marks)

Part B
There should be 2 questions each from module III and IV
Each question carries 10 marks
Students will have to answer any three questions out of 4 (3X10 marks =30 marks)

Part C
There should be 3 questions each from module V and VI
Each question carries 10 marks
Students will have to answer any four questions out of 6 (4X10 marks =40 marks)

Note: Each question can have a maximum of four sub questions, if needed.

APJ ABDUL KALAM TECHNOLOGICAL UNIVERSITY KTU
Estd. 2014
NEHRU COLLEGE OF ENGINEERING & RESEARCH CENTRE PAMPADY THIRUVILWAMALA, THRISSUR DT
PRINCIPAL
Nehru College of Engineering and Research Centre
Pampady Thiruvilwamala, Thrissur Dt
Pin 680 597 Kerala

NEHRU COLLEGE OF ENGINEERING AND RESEARCH CENTRE
(NAAC Accredited)
(Approved by AICTE, Affiliated to APJ Abdul Kalam Technological University, Kerala)

Mechatronics Engineering

Course code	Course Name	L-T-P - Credits	Year of Introduction
MR405	Embedded Systems	3-0-0-3	2016

Prerequisite : NIL

Course Objectives

- To make students familiar with the architecture, hardware and software elements, programming models, tools for embedded system design and implementation of embedded system.
- To give students knowledge on the hardware and real time operating systems used for the embedded systems design.
- To expose students to the concepts of embedded system principles, software development tools and RTOS

Syllabus

Embedded system, Functional building block of embedded system- Characteristics- Challenges in embedded system design- Classification-SOC- Custom Single-purpose processors- Application specific instruction set processors- General-purpose processors- Standard single-purpose processors-Common memory device- Types of I/O devices - Serial devices - Parallel port devices - Sophisticated features- Development tools-S/W Architectures.

Expected outcome.

The student will be familiar with

- the concepts of embedded systems
- the basic concepts of real time Operating system design.
- the design techniques to develop software for embedded systems
- the general purpose operating systems and the real time operating systems

Text Book:

1 Rajkamal, "*Embedded Systems – Architecture, Programming and Design*", Tata McGraw-Hill Publishing Company Ltd., New Delhi, 2010.

2. Frank Vahid and Tony Givargis, *Embedded System Design: A Unified Hardware/Software Introduction*, Wiley, 2002.

3. David E.Simon, "A*n embedded software primer*", Pearson Education Asia 2001.

References:

1. Wayne Wolf, "*Computers as Components: Principles of Embedded Computer Systems Design*", The Morgan Kaufmann Series in Computer Architecture and Design, Elsevier Publications, 2008.
2. Dainel W. Lewis, *Fundamentals of embedded software where C and assembly meet*, PHI 2002.

Course Plan

Module	Contents	Hours	Sem. Exam Marks
I	Embedded system- Functional building block of embedded system- Characteristics of embedded system applications- Challenges in embedded system design- Embedded system design processes	7	15%
II	Classification - Processors in the system - Other h/w units. Software components - Typical applications - Embedded systems on a chip (SoC) and use of VLSI circuits.	7	15%
FIRST INTERNAL EXAMINATION			

NEHRU COLLEGE OF ENGINEERING & RESEARCH CENTRE
PAMPADY
THIRUVILWAMALA
THRISSUR-DT.

PRINCIPAL
Nehru College of
Engineering and Research Centre
Pampady, Thiruvilwamala, Thrissur
Pin 680 597 Kerala

Scanned by TapScanner

III	Custom Single-purpose processors : Hardware-Combinational Logic- Transistors and logic gates- Basic combinational and Sequential logic design- Custom single purpose processor design and optimization. Application specific instruction set processors- Microcontrollers- Digital signal processors	7	15%
IV	General-purpose processors: Software: Basic architecture- Datapath- Control unit- Memory- Instruction execution- Pipelining- Superscalar and VLIW architectures- Instruction set- Program and data memory space- Registers- I/O- Interrupts- Operating Systems- Standard single-purpose processors: Peripherals-some examples such as Timers-counters- Analog-digital converters.	7	15%
SECOND INTERNAL EXAMINATION			
V	Common memory devices - Memory selection - Memory map - Internal devices & I/O devices map - Direct memory access -. Types of I/O devices - Serial devices - Parallel port devices - Sophisticated features - Timer and Counting devices - Advanced serial bus & I/O - High speed Buses - Common types - Advanced Buses.	7	20%
VI	**Development tools**: Host and Target machines – linker / locators – debugging techniques. **S/W Architectures:** Round robin-round robin with interrupt – function queue scheduling- RTOS.	7	20%
END SEMESTER EXAM			

QUESTION PAPER PATTERN

Maximum Marks : 100 Exam Duration:3 hours

PART A: FIVE MARK QUESTIONS

8 compulsory questions –1 question each from first four modules and 2 questions each from last two modules

(8 x 5= 40 marks)

PART B: 10 MARK QUESTIONS

5 questions uniformly covering the first four modules. Each question can have maximum of three sub questions, if needed. Student has to answer any 3 questions

(3 x10 = 30 marks)

PART C: 15 MARK QUESTIONS

4 questions uniformly covering the last two modules. Each question can have maximum of four sub questions, if needed. Student has to answer any two questions

(2 x15 = 30 marks)

NEHRU COLLEGE OF ENGINEERING & RESEARCH CENTRE PAMPADY THIRUVILWAMALA, THRISSUR-DT

PRINCIPAL
Nehru College of
Engineering and Research Centre
Pampady, Thiruvilwamala, Thrissur Dt
Pin 680 597 Kerala

Scanned by TapScanner

Course code	Course Name	L-T-P - Credits	Year of Introduction
MR 404	Power Electronics and Drives	3-0-0:3	2016

Prerequisite : Nil

Course Objectives

- To give an overview of different types of power semiconductor devices and their switching characteristics.
- To understand the operation, characteristics and performance parameters of controlled rectifiers.
- To study the operation, switching techniques and basic topologies of switching regulators

Syllabus

Power semi conductor devices- characteristics of power diodes- SCR- TRIAC- GTO- power BJT- power MOSFET and IGBT — phase controlled converters-single phase full converters- 3 phase half converter and 3 phase full converter – input power factor – thyristor triggering circuits- dc to dc choppers-dc chopper – step up and step down chopper – forced commutation – different techniques – voltage- current and load – commutated choppers – inverters-voltage source inverters – series- parallel and bridge inverters – PWM inverters – current source inverters- ac voltage controllers and cyclo converters-single phase ac voltage controller – multistage sequence control – step up and step down cyclo converters –introduction to electric drives– advantages- parts of electrical drives – fundamental torque equation – four quadrant operation – components of load torque

Expected outcome .

The students will be able to

- analyse the dynamic and switching characteristics of power semiconductor devices.
- determine the performance parameters of controlled rectifiers and AC voltage controllers.
- design Choppers and Switching Regulators.
- understand the working of Fixed DC to Variable AC converters and learn the Modulation Techniques employed in Inverters

Text Books:

1. Bhimbra P S, *Power Electronics,* Khanna Publishers, 2001
2. Reshid M.H., Power Electronics – Circuits Devices and Application, Prentice Hall International, New Delhi, 3rd Edition, 2004

References:

1. Dubey, G.K., Doradia, S.R., Joshi, A. and Singh, R.M., Thyristorised Power Controllers, Wiley Eastern Limited, 1986.
2. Joseph Vithayathil, Power Electronics – Principle and Applications, and Robbins, McGraw-Hill Inc, New York, 1995.
3. Lander, W., Power Electronics, McGraw-Hill and Company, 3rd Edition, 1993.
4. Mohan Undeland and Robbins, Power Electronics, John Wiley and Sons, New York, 1995
5. Singh, M.D., Khanchandani, K.B., Power Electronics, Tata McGraw-Hill, 1998.

Course Plan

Module	Contents	Hours	Sem. Exam Marks
I	**POWER SEMI CONDUCTOR DEVICES** Principle of operation – Characteristics of power diodes- SCR- TRIAC- GTO- Power BJT- Power MOSFET and IGBT – Thyristor protection circuits.	7	15%

NEHRU COLLEGE OF ENGINEERING & RESEARCH CENTRE
PAMPADY, THIRUVILWAMALA, THRISSUR DT.

PRINCIPAL
Nehru College of
Engineering and Research Centre
Pampady, Thiruvilwamala, Thrissur Dt
Pin 680 597 Kerala

Scanned by TapScanner

II	**PHASE CONTROLLED CONVERTERS** Single phase full converters- 3 phase half converter and 3 phase full converter – inverter operation – input power factor – effect of source inductance – Thyristor triggering circuits.	7	15%
	FIRST INTERNAL EXAMINATION		
III	**DC TO DC CHOPPERS** DC Chopper – Principle of operation – step up and step down chopper – Forced commutation – different techniques – voltage- current and load – commutated choppers – step up and step down chopper.	7	15%
IV	**INVERTERS** Voltage source inverters – series- parallel and bridge inverters – PWM inverters – current source inverters.	7	15%
	SECOND INTERNAL EXAMINATION		
V	**AC VOLTAGE CONTROLLERS AND CYCLOCONVERTERS** Single phase AC voltage controller – multistage sequence control – step up and step down cyclo converters – three phase to single phase and three phase cyclo converters.	7	20%
VI	**INTRODUCTION TO ELECTRIC DRIVES** Electrical Drives – advantages of electric drives - parts of electrical drives – fundamental torque equation – four quadrant operation – components of load torque - friction- windage & load torques – steady state stability	7	20%
	END SEMESTER EXAM		

QUESTION PAPER PATTERN

Maximum Marks : 100 Exam Duration:3 hours

PART A: FIVE MARK QUESTIONS
8 compulsory questions –1 question each from first four modules and 2 questions each from last two modules (8 x 5= 40 marks)

PART B: 10 MARK QUESTIONS
5 questions uniformly covering the first four modules. Each question can have maximum of three sub questions, if needed. Student has to answer any 3 questions (3 x10 = 30 marks)

PART C: 15 MARK QUESTIONS
4 questions uniformly covering the last two modules. Each question can have maximum of four sub questions, if needed. Student has to answer any two questions
(2 x15 = 30 marks)

NEHRU COLLEGE OF ENGINEERING & RESEARCH CENTRE
PAMPADY, THIRUVILWAMALA, THRISSUR DT.

PRINCIPAL
Nehru College of
Engineering and Research Centre
Pampady, Thiruvilwamala, Thrissur Dt
Pin 680 597 Kerala

Scanned by TapScanner

Course code	Course Name	L-T-P - Credits	Year of Introduction
MR365	Composite Materials	3-0-0 -3	2016

Prerequisite : NIL

Course Objectives

- To impart knowledge on characteristics of composites, the methods of manufacturing, methods of testing their properties and their applications.

Syllabus

Introduction to composites: Characteristics and classifications of composites – study of fibers- flake and particulate composites- Manufacturing methods: Production of various fibers – matrix materials and surface treatments – fabrication of composites – fabrication of thermosetting resin matrix composites – fabrication of thermoplastic resin matrix composites – short fiber composites – fabrication of metal matrix and ceramic matrix composites- Testing aspects of composites: Experimental characterisation of composites – uniaxial tension- compression and shear tests – determination of inter laminar fracture toughness – damage identification through non-destructive evaluation techniques – ultrasonic- acoustic emission and radiography-Special laminates: Symmetric laminates- unidirectional- cross-ply and angle-ply laminates- quasi-isotropic laminates- Recent trends in composite materials – carbon composites- Bucky Paper- Application of composite materials in aerospace- automotive- defense and industry.

Expected outcome .

- The students will acquire knowledge on the characteristics and application of modern composite materials.

Text Book:

1. B. D. Agarwal, L. J. Broutman, *Analysis and Performance of Fiber Composites*, John Wiley.

References:

1. R. F. Gibson, *Principle of Composite Material Mechanics*, McGraw Hill
2. M. M. Schwartz, *Composite Materials Handbook*, McGraw Hill. Inc.
3. R. M. Jones, *Mechanics of Composite Materials*, McGraw Hill. Inc
4. S. W. Tsai, *Introduction to Composite Materials*, Technomic Publishing Company.

Course Plan

Module	Contents	Hours	Sem. Exam Marks
I	Introduction to composites: Characteristics and classifications of composites – study of fibers- flake and particulate composites. Manufacturing methods: Production of various fibers – matrix materials and surface treatments.	7	15%
II	Fabrication of composites – fabrication of thermosetting resin matrix composites – fabrication of thermoplastic resin matrix composites – short fiber composites – fabrication of metal matrix and ceramic matrix composites.	7	15%
FIRST INTERNAL EXAMINATION			
III	Testing aspects of composites: Experimental characterization of composites – uniaxial tension- compression and shear tests – determination of inter-laminar fracture toughness	7	15%

NEHRU COLLEGE OF ENGINEERING & RESEARCH CENTRE
PAMPADY, THIRUVILWAMALA, THRISSUR DT.

PRINCIPAL
Nehru College of
Engineering and Research Centre
Pampady, Thiruvilwamala, Thrissur Dt
Pin 680 597 Kerala

Scanned by TapScanner

IV	Damage identification through non-destructive evaluation techniques – ultrasonic- acoustic emission and radiography	7	15%
SECOND INTERNAL EXAMINATION			
V	Special laminates: Symmetric laminates- unidirectional- cross-ply and angle-ply laminates- quasi-isotropic laminates.	7	20%
VI	Recent trends in composite materials – carbon-carbon composites- Bucky Paper- Application of composite materials in aerospace- automotive- defense and industry.	7	20%
END SEMESTER EXAM			

QUESTION PAPER PATTERN

Maximum Marks : 100 Exam Duration:3 hours

PART A: FIVE MARK QUESTIONS
8 compulsory questions –1 question each from first four modules and 2 questions each from last two modules (8 x 5= 40 marks)

PART B: 10 MARK QUESTIONS
5 questions uniformly covering the first four modules. Each question can have maximum of three sub questions, if needed. Student has to answer any 3 questions (3 x10 = 30 marks)

PART C: 15 MARK QUESTIONS
4 questions uniformly covering the last two modules. Each question can have maximum of four sub questions, if needed. Student has to answer any two questions (2 x15 = 30 marks)

NEHRU COLLEGE OF ENGINEERING & RESEARCH CENTRE
PAMPADY, THIRUVILWAMALA, THRISSUR DT.

PRINCIPAL
Nehru College of
Engineering and Research Centre
Pampady, Thiruvilwamala, Thrissur Dt
Pin 680 597 Kerala

Scanned by TapScanner

Course code	Course Name	L-T-P - Credits	Year of Introduction
MR464	Agile Manufacturing Systems	3-0-0:3	2016

Prerequisite : NIL

Course Objectives

- To acquaint with basic concepts of agile manufacturing.
- To understand the conceptual and theoretical basis for the design and implementation of Advanced Manufacturing Systems.
- To design and evaluate the performance of agile manufacturing systems.

Syllabus

Introduction, conceptual framework, core concepts, Change Management, product costing, performance, Measurement and control systems, Agile Manufacturing Enterprise Design -Skill & Knowledge Enhancing Technologies For Agile Manufacturing, scheduling, technology design strategic, Design Concepts , Problems and Future Development.

Expected outcome .

The students will

i. understand the scope of Agile manufacturing systems.
ii. understand the concepts of designing agile manufacturing systems

Text Book:

1. Gunasekaran A, "Agile Manufacturing, 21st Strategy Competitiveness Strategy", Elsevier Publications, 2001.
2. Paul T Kidd , Concurrent Engg, Addison Wesley Publication, 1994
3. Paul T Kidd ,World Class manufacturing, Addition Wesley Pub., 1994
4. Paul T. Kidd , Agile Manufacturing -Forging new Frontiers, Addison Wesley Publication, 1994.

References:

1. Brian H Maskell, "Software and the Agile Manufacturer, Computer Systems and World Class Manufacturing, Productivity Press, 1993.
2. Goldman S L, Nagal R N and Preiss K, "Agile Competitors and Virtual Organizations", Van Nostrand Reinhold, 1995.
3. S. R. Devadasan, V. Sivakumar, R. Murugesh, P. R. Shalij; Lean and Agile manufacturing: Theoretical, practical and research futurities, PHI learning private ltd.

Course Plan

Module	Contents	Hours	Sem. Exam Marks
I	Introduction: Need for agile Manufacturing -Competitive environment of the future- the business case for agile manufacturing conceptual framework for agile manufacturing	7	15%
II	Four Core Concepts: strategy driven approach- integrating organization- people technology interdisciplinary design methodology	7	15%
	FIRST INTERNAL EXAMINATION		
III	Agile Manufacturing and Change Management: The change implications- post failures in advanced manufacturing- changes	7	15%

NEHRU COLLEGE OF ENGINEERING RESEARCH CENTRE
PAMPADY THIRUVILWAMALA, THRISSUR DT

PRINCIPAL
Nehru College of
Engineering and Research Centre
Pampady, Thiruvilwamala, Thrissur Dt
Pin 680 597 Kerala

Scanned by TapScanner

	on the way- traditional management accounting- paradigm- investment appraisal- product costing - performance- Measurement and control systems		
IV	Control technological and Design paradigms - traditional problems in workplace- organizational issues -role of technology	7	15%
SECOND INTERNAL EXAMINATION			
V	Agile Manufacturing Enterprise Design: Agile manufacturing – enterprise design -system concepts as the basic manufacturing theory-joint technical & organizational design as a model for the design of agile manufacturing enterprise-- enterprise design process -insights into design processes	7	20%
VI	Skill & Knowledge Enhancing Technologies For Agile Manufacturing: Skill and Knowledge enhancing Technologies - scheduling -technology design strategic- Design Concepts- Historical Overview- Lessons- Problems and Future Development	7	20%
END SEMESTER EXAM			

QUESTION PAPER PATTERN

Maximum Marks : 100 Exam Duration:3 hours

PART A: FIVE MARK QUESTIONS

8 compulsory questions –1 question each from first four modules and 2 questions each from last two modules (8 x 5= 40 marks)

PART B: 10 MARK QUESTIONS

5 questions uniformly covering the first four modules. Each question can have maximum of three sub questions, if needed. Student has to answer any 3 questions (3 x10 = 30 marks)

PART C: 15 MARK QUESTIONS

4 questions uniformly covering the last two modules. Each question can have maximum of four sub questions, if needed. Student has to answer any two questions

(2 x15 = 30 marks)

NEHRU COLLEGE OF ENGINEERING & RESEARCH CENTRE PAMPADY THIRUVILWAMALA THRISSUR DT

PRINCIPAL
Nehru College of
Engineering and Research Centre
Pampady, Thiruvilwamala, Thrissur Dt
Pin 680 597 Kerala

Scanned by TapScanner

Course code	Course Name	L-T-P - Credits	Year of Introduction
MR308	Digital Manufacturing	3-0-0 -3	2016

Prerequisite : NIL

Course Objectives

- To impart knowledge in FMS and shop floor control.
- To give knowledge in CNC machines and their programming.
- To enlighten on the working principles of various sensors in digital manufacturing.

Syllabus

Introduction to Computer Integrated Manufacturing- - classification - open loop and closed loop systems - special tool holders- Automatic tool changers. NC part programming - part programming examples. Controls in CIM- material handling in CIM- AGV- Vehicle guidance-vehicle management and safety automated storage systems- ASRS components and operations-features of ASRS- Quality control Condition monitoring of manufacturing systems – Role of sensors in manufacturing automation-operation principles of different sensors in Robotics and manufacturing – pneumatic- Light sensors– encoder- resolver- potentiometers- range- proximity – Temperature sensors -Pressure sensors –position sensors- displacement and velocity sensors. – sensors for monitoring force- vibration and noise. Acoustics emission sensors-principles and applications-concept of tool wear and its monitoring-MRP-MRPII-Shop floor control –Factory data collection systems – Automatic identification methods – Bar code technology- magnetic strips- automated data collection system – Agile manufacturing-flexible manufacturing.

Expected outcome

The students will

i. Understand the concept of FMS and shop floor control.
ii. Get knowledge on the construction and working of sensors used in robotics and digital manufacturing.
iii. Get knowledge in automatic identification methods.

Text Books:

1. Sabrie Salomon, Sensors and Control Systems in Manufacturing, McGraw Hill Int. Ed., 1994.
2. Mikell P. Groover, Automation Production System and Computer Integrated Manufacturing, Prentice Hall of India Ltd., 2001
3. Patranabis .D, Sensors and Transducers, Wheeler publishers, 1994.
4. S.R.Deb, Robotics technology and flexible automation, Tata McGraw Hill publishing Co. Ltd., 1994.

References:

1. Richard D. Klafter, Robotic Engineering, Prentice Hall of India Pvt., Ltd., 2001.
2. Julian W. Gardner, Micro Sensor MEMS and Smart Devices, John Wiley & Sons, 2001
3. Randy Frank, Understanding Smart Sensors, Artech house, USA, 1996

Course Plan

Module	Contents	Hours	Sem. Exam Marks
I	Introduction to Computer Integrated Manufacturing- fundamentals of numerical control and Computer Numerical Control- advantages of NC system - classification of NC system - open loop and closed loop systems - special tool	7	15%

NEHRU COLLEGE OF ENGINEERING & RESEARCH CENTRE
PAMPADY, THIRUVILWAMALA, THRISSUR DT.

PRINCIPAL
Nehru College of
Engineering and Research Centre
Pampady, Thiruvilwamala, Thrissur
Pin 680...

Scanned by TapScanner

	holders- Automatic tool changers – Digital inspection		
II	NC part programming - manual programming - part programming examples- point to point programming and contour programming- computer aided programming concepts- post processor- program languages- APT- programming - part programming examples.	7	15%
FIRST INTERNAL EXAMINATION			
III	Controls in CIM- material handling in CIM- AGV- Vehicle guidance- vehicle management and safety automated storage systems- ASRS components and operations- features of ASRS-	7	15%
IV	Introduction – Role of sensors in manufacturing automation- operation principles of different sensors in Robotics and manufacturing – pneumatic- Light sensors– encoder- resolver- potentiometers- range- proximity- – Temperature sensors - Pressure sensors –position sensors- displacement and velocity sensors.	7	15%
SECOND INTERNAL EXAMINATION			
V	Quality control Condition monitoring of manufacturing systems-principles –sensors for monitoring force- vibration and noise. Acoustics emission sensors-principles and applications- concept of tool wear and its monitoring	7	20%
VI	MRP-MRPII-Shop floor control –Factory data collection systems – Automatic identification methods – Bar code technology- magnetic strips- automated data collection system – Agile manufacturing-flexible manufacturing	7	20%
END SEMESTER EXAM			

QUESTION PAPER PATTERN

Maximum Marks : 100 Exam Duration:3 hours

PART A: FIVE MARK QUESTIONS
8 compulsory questions –1 question each from first four modules and 2 questions each from last two modules (8 x 5= 40 marks)

PART B: 10 MARK QUESTIONS
5 questions uniformly covering the first four modules. Each question can have maximum of three sub questions, if needed. Student has to answer any 3 questions (3 x10 = 30 marks)

PART C: 15 MARK QUESTIONS
4 questions uniformly covering the last two modules. Each question can have maximum of four sub questions, if needed. Student has to answer any two questions
(2 x15 = 30 marks)

NEHRU COLLEGE OF ENGINEERING & RESEARCH CENTRE
PAMPADY, THIRUVILWAMALA, THRISSUR DT.

PRINCIPAL
Nehru College of
Engineering and Research Centre
Pampady, Thiruvilwamala, Thrissur Dt
Pin 680 597 Kerala

Scanned by TapScanner

Course No.	Course Name	L-T-P - Credits	Year of Introduction
MR305	PLC and Data Acquisition Systems	3-0-0--3	2016

Prerequisite : NIL

Course Objectives

- To provide students the fundamentals of PLC and Data acquisition systems

Syllabus

Need of computer in a control system-Functional block diagram of a computer control system-Data loggers- Supervisory computer control- Direct digital control-Digital control interfacing-SCADA. DACs-Basic DAC Techniques-Types of DAC - ADCs – Types of ADC-Comparison of A/D conversion techniques-DAC/ADC specifications -Isolation amplifiers. Sampling theorem – Sampling and digitizing – Aliasing – Sample and hold circuit– Definition- design and need for data acquisition systems – Interfacing ADC and DAC with Microprocessor / Multiplexer - Multiplexed channel operation –Microprocessor/PC based acquisition systems. Basics of PLC-Advantages- Capabilities of PLC- Architecture of PLC- Scan cycle- Types of PLC- Types of I/O modules- Configuring a PLC- PLC wiring-Simple process control programs using Relay Ladder Logic - PLC arithmetic functions - Timers and counters –data transfer-comparison and manipulation instructions- PID instructions- PTO / PWM generation. Requirement of communication networks of PLC – connecting PLC to computer – Interlocks and alarms Need for HMI systems. Types of HMI- interfacing PLC to HMI.

Expected outcome

- Students will understand the basics of data conversion and data acquisition systems
- Students will acquire proficiency in programming programmable logic circuits.

Text Books:

1 Curtis D. Johnson Process Control Instrumentation Tech 8TH Edition Prentice Hall June 2005.

2. Petrezeulla, Programmable Controllers, McGraw Hill , 1989.

3. D.Roy Choudhury and Shail B.Jain, Linear Integrated circuits, New age International Pvt .Ltd, 2003.

4.John W Webb & Ronald A Reis, "Programmable logic controllers: Principles and Applications", Prentice Hall India, 2003.

References:

1. G.B.Clayton, *Data Converters* The Mac Millian Press Ltd., 1982.
2. Hughes .T, *Programmable Logic Controllers*, ISA Press, 1989.
3. Bolton W. , "Mechatronics", Pearson Education, 2009
4. Prof. Rajesh Mehra, *Plcs & Scada - Theory And Practice*, Laxmi Publication

Course Plan

Module	Contents	Hours	Sem. Exam Marks
I	**Computer Control -Introduction** Need of computer in a control system-Functional block diagram of a computer control system-Data loggers- Supervisory computer control- Direct digital control-Digital control interfacing-SCADA.	7	15%
II	**Data Converters** DACs-Basic DAC Techniques-Weighted Resistor- R-2R Ladder and Inverted R-2R ladder type DACs- ADCs –	7	15%

NEHRU COLLEGE OF ENGINEERING & RESEARCH CENTRE
PAMPADY THIRUVILWAMALA, THRISSUR DT.

PRINCIPAL
Nehru College of
Engineering and Research Centre
Pampady, Thiruvilwamala, Thrissur Dt
Pin 680 597 Kerala

Scanned by TapScanner

	Parallel ADC- Dual slope ADC- Successive Approximation ADC-Comparison of A/D conversion techniques- DAC/ADC specifications - Typical IC's for DAC- ADC – Isolation amplifiers.		
	FIRST INTERNAL EXAMINATION		
III	**Data Acquisition Systems** Sampling theorem – Sampling and digitising – Aliasing – Sample and hold circuit– Definition- design and need for data acquisition systems – Interfacing ADC and DAC with Microprocessor / Multiplexer - Multiplexed channel operation –Microprocessor/PC based acquisition systems.	7	15%
IV	**Programmable Logic Controllers** Basics of PLC- Advantages- Capabilities of PLC- Architecture of PLC- Scan cycle- Types of PLC- Types of I/O modules- Configuring a PLC- PLC wiring.	7	15%
	SECOND INTERNAL EXAMINATION		
V	**PLC Programming** Simple process control programs using Relay Ladder Logic - PLC arithmetic functions - Timers and counters –data transfer- comparison and manipulation instructions- PID instructions- PTO / PWM generation.	7	20%
VI	**PLC Communication and HMI** Requirement of communication networks of PLC – connecting PLC to computer – Interlocks and alarms HMI -Need for HMI systems- Types of HMI- interfacing PLC to HMI.	7	20%
	END SEMESTER EXAM		

QUESTION PAPER PATTERN

Maximum Marks : 100 Exam Duration:3 hours

PART A: FIVE MARK QUESTIONS

8 compulsory questions –1 question each from first four modules and 2 questions each from last two modules (8 x 5= 40 marks)

PART B: 10 MARK QUESTIONS

5 questions uniformly covering the first four modules. Each question can have maximum of three sub questions, if needed. Student has to answer any 3 questions

(3 x10 = 30 marks)

PART C: 15 MARK QUESTIONS

4 questions uniformly covering the last two modules. Each question can have maximum of four sub questions, if needed. Student has to answer any two questions

(2 x15 = 30 marks)

NEHRU COLLEGE OF ENGINEERING & RESEARCH CENTRE
PAMPADY, THIRUVILWAMALA, THRISSUR DT.

PRINCIPAL
Nehru College of
Engineering and Research Centre
Pampady, Thiruvilwamala, Thrissur (Dt)
Pin 680 597 Kerala

Scanned by TapScanner

Course code	Course Name	L-T-P - Credits	Year of Introduction
MR463	Bio Mechatronics	3-0-0-3	2016

Prerequisite : NIL

Course Objectives

The course enables the students to:

- understand types of sensors used in biomedical applications.
- be familiar with various equipment in bio-medical applications and the techniques of diagnosis

Syllabus

Cell structure – electrode – electrolyte interface- electrode potential- electrodes for their measurement- ECG- EEG- EMG -Basic transducer principles – Bio & Nano sensors - Input isolation- – instrument power supply- Telemetry principles – Bio telemetry-Electrocardiograph measurements – blood pressure measurement – blood flow measurement – phonocardiography – vector cardiography - Heart lung machine – artificial ventilator – Anesthetic machine – Basic ideas of CT scanner – MRI and ultrasonic scanner – Bio-telemetry – laser equipment and application – cardiac pacemaker – DC – defibrillator patient safety - electrical shock hazards- Centralized patient monitoring system- computers in medicine – basis of signal conversion and digital filtering data reduction technique – time and frequency domain technique – ECG Analysis

Expected outcome

The students will

i. gain knowledge in medical measurements.
ii. be able to select appropriate equipments for medical applications.
iii. have knowledge on diagnosis and analysis capabilities of biomedical equipments.

Text Books:

Arumugam M., "Bio Medical Instrumentation", Anuradha agencies Pub., 2002.

References:

1. Khandpur, R.S., "Handbook of Biomedical Instrumentation", TMH, 1989.
2. Geddes L.A., and Baker, L.E., Principles of Applied Bio-medical Instrumentation, 3rd Edition, John Wiley and Sons, 1995.
3. Cromwell, Weibell and Pfeiffer, Biomedical Instrumentation and Measurements, 2nd Edition, Prentice Hall of India, 1999.
4. Tompkins W.J., Biomedical Digital Signal Processing, Prentice Hall of India, 1998.

Course Plan

Module	Contents	Hours	Sem. Exam Marks
I	Cell structure – electrode – electrolyte interface- electrode potential- resting and action potential – electrodes for their measurement- ECG- EEG- EMG – machine description – methods of measurement – three equipment failures and trouble shooting	7	15%
II	Basic transducer principles Types – source of bioelectric potentials – resistive- inductive- capacitive- fiber-optic- photoelectric and chemical transducers – their description and feature applicable for biomedical instrumentation – Bio & Nano sensors & application	7	15%

NEHRU COLLEGE OF ENGINEERING & RESEARCH CENTRE
PAMPADY
THIRUVILWAMALA
THRISSUR DT.

PRINCIPAL
Nehru College of
Engineering and Research Centre
Pampady, Thiruvilwamala, Thrissur
Pin 680 597 Kerala

Scanned by TapScanner

FIRST INTERNAL EXAMINATION			
III	Input isolation- DC amplifier- power amplifier- and differential amplifier – feedback- op-Amp-electrometer amplifier- carrier Amplifier – instrument power supply- Oscillagraphic – galvanometric - X-Y- magnetic recorder- storage oscilloscopes – electron microscope – PMMC writing systems – Telemetry principles – Bio telemetry	7	15%
IV	Electrocardiograph measurements – blood pressure measurement: by ultrasonic method – plethysonography – blood flow measurement by electromagnetic flow meter cardiac output measurement by dilution method – phonocardiography – vector cardiography	7	15%
SECOND INTERNAL EXAMINATION			
V	Heart lung machine – artificial ventilator – Anesthetic machine – Basic ideas of CT scanner – MRI and ultrasonic scanner – Bio-telemetry – laser equipment and application – cardiac pacemaker – DC – defibrillator patient safety - electrical shock hazards- Centralized patient monitoring system	7	20%
VI	Introduction – computers in medicine – basis of signal conversion and digital filtering data reduction technique – time and frequency domain technique – ECG Analysis	7	20%
END SEMESTER EXAM			

QUESTION PAPER PATTERN

Maximum Marks : 100 Exam Duration:3 hours

PART A: FIVE MARK QUESTIONS
8 compulsory questions –1 question each from first four modules and 2 questions each from last two modules (8 x 5= 40 marks)

PART B: 10 MARK QUESTIONS
5 questions uniformly covering the first four modules. Each question can have maximum of three sub questions, if needed. Student has to answer any 3 questions
(3 x10 = 30 marks)

PART C: 15 MARK QUESTIONS
4 questions uniformly covering the last two modules. Each question can have maximum of four sub questions, if needed. Student has to answer any two questions
(2 x15 = 30 marks)

NEHRU COLLEGE OF ENGINEERING & RESEARCH CENTRE
PAMPADY
THIRUVILWAMALA,
THRISSUR DT.

PRINCIPAL
Nehru College of
Engineering and Research Centre
Pampady, Thiruvilwamala, Thrissur Dt
Pin 680 597 Kerala

Scanned by TapScanner

Course code	Course Name	L-T-P - Credits	Year of Introduction
MR303	Microprocessors and Microcontrollers	3-0-0--3	2016

Prerequisite : NIL

Course Objectives

- To study the Architecture of microprocessor 8086 & microcontroller 8051
- To study the addressing modes & instruction set of 8086 & 8051.
- To introduce the need & use of Interrupt structure 8086 & 8051.

Syllabus

Architecture of Intel 8086 processor – Pin description –8086 configurations: Minimum mode and Maximum mode –Timing diagrams – DMA-8086 Addressing modes – Instruction set- Programmable Peripheral interface (8255) – Mode 0,1,2 operations- Interval timer application 8253- programmable interrupt controller 8259- Programmable communication Interface (8251)- DMA Controller 8237-Introduction to embedded controllers- architectures- introduction to 8051- 8051 family architecture of 8051 -pin details- port operation- memory organization- SFRs- programming in assembly - assembler directives- addressing modes- instruction set- timer and counter operations- interrupts- serial communication- introduction to hardware interfacing- programmable I/O 8255- external memory- seven segment display- LCD- stepper motor- DAC- ADC- matrix keyboard .

Expected outcome .

Student will gain knowledge on microprocessor and microcontrollers based system design

Text Book:

1. A.K. Roy, K.M. Bhurchandi, *Advanced Microprocessors and Peripherals* McGraw- Hill International
2. Muhammad Ali Mazidi, Janice Gillipse Mazidi, Rolin D. Mckinlay, *"8051 Microcontroller and Embedded Systems Using Assembly and C"* Pearson Education, 2010

References:

1. Douglas V Hall, *Microprocessors And Interfacing Programming and Hardware* Tata McGraw-Hill
2. N.Senthil Kumar, M.Saravanan, S.Jeevananthan, „Microprocessors and Microcontrollers", Oxford,2013.

Course Plan

Module	Contents	Hours	Sem. Exam Marks
I	**Architecture of 8086** Architecture of Intel 8086 processor – Pin description –8086 configurations: Minimum mode and Maximum mode –system bus timing - Timing diagrams – Interrupts: Interrupt mechanism – Types and priority – Interrupt vector table- DMA.	8	15%
II	**Programming 8086** 8086 Addressing modes – Instruction set – Data transfer Instructions – String Instructions – Logical Instructions – Arithmetic Instructions – transfer control Instructions – Processor control instructions- Arithmetic operations- Code conversion- searching –Sorting	6	15%

NEHRU COLLEGE OF ENGINEERING & RESEARCH CENTRE PAMPADY THIRUVILWAMALA THRISSUR DT.

PRINCIPAL
Nehru College of
Engineering and Research Centre
Pampady, Thiruvilwamala, Thrissur Dt
Pin 680 597 Kerala

Scanned by TapScanner

	FIRST INTERNAL EXAMINATION		
III	**8086 interface** Programmable Peripheral interface (8255) – Mode 0,1,2 operations- Interval timer application 8253- programmable interrupt controller 8259- Programmable communication Interface (8251)- DMA Controller 8237.	8	15%
IV	**Architecture of 8051** Overview of 8051 microcontrollers – Architecture – Assembly programming –data types and directives –flag bits – register banks and stack.	6	15%
	SECOND INTERNAL EXAMINATION		
V	**Programming 8051** 8051Addressing modes – Instruction set -loop and Jump instructions – call instructions – Arithmetic and Logic instructions and simple programs – 8051 interrupts – programming timer interrupts.	7	20%
VI	**8051 interface** Interfacing of microcontroller – External memory interfacing- LCD and Keyboard interfacing – Parallel and serial ADC interfacing – DAC interfacing – Interfacing 8255 - Stepper motor control – DC motor interfacing.	7	20%
	END SEMESTER EXAM		

QUESTION PAPER PATTERN

Maximum Marks : 100 Exam Duration:3 hours

PART A: FIVE MARK QUESTIONS

8 compulsory questions –1 question each from first four modules and 2 questions each from last two modules (8 x 5= 40 marks)

PART B: 10 MARK QUESTIONS

5 questions uniformly covering the first four modules. Each question can have maximum of three sub questions, if needed. Student has to answer any 3 questions

(3 x10 = 30 marks)

PART C: 15 MARK QUESTIONS

4 questions uniformly covering the last two modules. Each question can have maximum of four sub questions, if needed. Student has to answer any two questions

(2 x15 = 30 marks)

NEHRU COLLEGE OF ENGINEERING & RESEARCH CENTRE PAMPADY THIRUVILWAMALA, THRISSUR DT

PRINCIPAL
Nehru College of
Engineering and Research Centre
Pampady, Thiruvilwamala, Thrissur Dt
Pin 680 597 Kerala

Scanned by TapScanner

Course Number	Course Name	L-T-P-Credits	Year of Introduction
ME200	Fluid mechanics and Machinery	3-1-0-4	2016

Prerequisite : Nil

Course Objectives:

- To introduce students, the fundamental concepts related to the mechanics of fluids.
- To understand the basic principles of fluid machines and devices.
- To apply acquired knowledge on real life problems.
- To analyze existing fluid systems and design new fluid systems.

Syllabus

Fundamental Concepts, fluid statics and dynamics, fluid kinematics, boundary layer theory, hydraulic turbines, positive displacement pumps, rotary motion of liquids, centrifugal pump, pumping devices.

Expected Outcome

Up on completion of course the students might be in a position to:

i. Analyze flow problems associated with statics, kinematics and dynamics of fluids.
ii. Design and analyze fluid devices such as water turbines and pumps.
iii. Understand and rectify problems faced in practical cases of engineering applications.

Text Book:

1. Modi P. N. and S. M. Seth, *Hydraulics & Fluid Mechanics*, S.B.H Publishers, New Delhi, 2002.
2. Kumar D. S., *Fluid Mechanics and Fluid Power Engineering*, S. K. Kataria & Sons, New Delhi, 1998.

References:

1. J. F. Douglas, "Fluid Mechanics", Pearson education.
2. Cengel Y. A. and J. M. Cimbala, Fluid Mechanics, Tata McGraw Hill, 2013
3. Robert W. Fox and Mc Donald, "Introduction to fluid dynamics", John Wiley and sons
4. K. Subrahmanya, "Theory and applications of fluid mechanics", (TMH)
5. Shames. I. H, "Mechanics of fluids".
6. Jagadish Lal, "Fluid mechanics and Hydraulic machines".
7. R K Bansal, "Hydraulic Machines"

Course Plan

Module	Contents	Hours	Sem. exam marks
I	**Fundamental concepts:** Properties of fluid - density, specific weight, viscosity, surface tension, capillarity, vapour pressure, bulk modulus, compressibility, velocity, rate of shear strain, Newton's law of viscosity, Newtonian and non-Newtonian fluids, real and ideal fluids, incompressible and compressible fluids.	6	15%

NEHRU COLLEGE OF ENGINEERING & RESEARCH CENTRE
PAMPADY
THIRUVILWAMALA,
THRISSUR DT.

PRINCIPAL
Nehru College of
Engineering and Research Centre
Pampady, Thiruvilwamala, Thrissur Dt
Pin 680 597 Kerala

Scanned by TapScanner

II	**Fluid statics:** Atmospheric pressure, gauge pressure and absolute pressure. Pascal's Law, measurement of pressure - piezo meter, manometers, pressure gauges, energies in flowing fluid, head - pressure, dynamic, static and total head, forces on planar and curved surfaces immersed in fluids, centre of pressure, buoyancy, equilibrium of floating bodies, metacentre and metacentric height.	10	15%
	First Internal Exam		
III	**Fluid kinematics and dynamics:** Classification of flow -1D, 2D and 3D flow, steady, unsteady, uniform, non-uniform, rotational, irrotational, laminar and turbulent flow, path line, streak line and stream line. Continuity equation, Euler's equation, Bernoulli's equation. Reynolds experiment, Reynold's number. Hagen- Poiseuille equation, head loss due to friction, friction, Darcy- Weisbach equation, Chezy's formula, compounding pipes, branching of pipes, siphon effect, water hammer transmission of power through pipes (simple problems)	8	15%
IV	**Boundary layer theory:** Basic concepts, laminar and turbulent boundary layer, displacement, momentum, energy thickness, drag and lift, separation of boundary layer. Flow rate measurements- venturi and orifice meters, notches and weirs (description only for notches, weirs and meters), practical applications, velocity measurements- Pitot tube and Pitot –static tube.	10	15%
	Second Internal Exam		
V	**Hydraulic turbines :** Impact of jets on vanes - flat, curved, stationary and moving vanes - radial flow over vanes. Impulse and Reaction Turbines – Pelton Wheel constructional features - speed ratio, jet ratio & work done , losses and efficiencies, inward and outward flow reaction turbines- Francis turbine constructional features, work done and efficiencies – axial flow turbine (Kaplan) constructional features, work done and efficiencies, draft tubes, surge tanks, cavitation in turbines.	10	20%
VI	**Positive displacement pumps:** reciprocating pump, indicator diagram, air vessels and their purposes, slip, negative slip and work required and efficiency, effect of acceleration and friction on indicator diagram (no derivations), multi cylinder pumps. **Rotary motion of liquids:** – free, forced and spiral vortex flows, (no derivations), centrifugal pump, working principle, impeller, casings, manometric head, work, efficiency and losses, priming, specific speed, multistage pumps, selection of pumps, pump characteristics.	10	20%
	End Semester Exam		

NEHRU COLLEGE OF ENGINEERING & RESEARCH CENTRE
PAMPADY
THIRUVILWAMALA,
THRISSUR DT.

PRINCIPAL
Nehru College of
Engineering and Research Centre
Pampady, Thiruvilwamala, Thrissur Dt
Pin 680 597 Kerala

Scanned by TapScanner

Question Paper Pattern

Max. marks: 100, Time: 3 hrs

The question paper should consist of three parts

Part A

4 questions uniformly covering modules I and II. Each question carries 10 marks

Students will have to answer any three questions out of 4 (3X10 marks =30 marks)

Part B

4 questions uniformly covering modules III and IV. Each question carries 10 marks

Students will have to answer any three questions out of 4 (3X10 marks =30 marks)

Part C

6 questions uniformly covering modules V and VI. Each question carries 10 marks

Students will have to answer any four questions out of 6 (4X10 marks =40 marks)

Note: In all parts, each question can have a maximum of four sub questions, if needed.

PRINCIPAL
Nehru College of
Engineering and Research Centre
Pampady, Thiruvilwamala, Thrissur Dt
Pin 680 597 Kerala

Scanned by TapScanner

Course code	Course Name	L-T-P - Credits	Year of Introduction
MR407	Autotronics	3-0-0-3	2016

Prerequisite : NIL

Course Objectives

- This course provides basic knowledge on the working of automobiles and the electrical and electronic systems in automobiles.

Syllabus

Automotive fundamentals: The engine-components-systems -Automotive sensors -Fuel injection and Ignition system –Electronic ignition system- Safety and comfort - Electric vehicles and hybrid vehicles - Vehicle Intelligence - mobile robot vision -object detection- collision warning and Avoidance system-low tire pressure warning system.

Expected outcome .

Students will

- acquire knowledge on the sensors used in vehicles
- be familiar with the various electronic controls used in automobiles
- become familiar with advanced comfort and safety systems used in automobiles

Text Book:

1. Tom Denton, Automobile electrical and electronic systems, BH Publication, Third edition. 2004

References:

1. Willium B. Ribbens, Understanding Automotive Electronics - Sixth edition Elsevier Science 2003
2. Ronald K.Jurgen, Sensors and Transducers - SAE 2003
3. Jack Erjavec, Robert Scharff, Automotive Technology - Delmar publications Inc 1992
4. Ronald K.Jurgen, Electric and Hybrid-electric vehicles - SAE 2002
5. Ichiro Masaki, Vision-based Vehicle Guidance - Springer Verlag, Newyork 1992
6. Jay Webster, Class Room Manual For Automotive Service And System - Delmer Publications Inc 1995
7. Ron Hodkinson, John Fenton, Light Weight Electric/Hybrid Vehicle Design - Read Educational and Professional Publications Ltd. 2001.

Course Plan

Module	Contents	Hours	Sem. Exam Marks
I	Automotive fundamentals: The engine-components-Drive train -Starting & charging systems operation- Ignition system- Suspension systems-brakes -ABS - Steering system –Adaptive Cruise Control	7	15%
II	Automotive sensors: introduction- working principle of sensors- throttle position sensors-manifold pressure sensor- mass air flow sensor-engine coolant temperature sensors- vehicle speed sensors- crankshaft position sensors-exhaust gas oxygen sensors	7	15%
	FIRST INTERNAL EXAMINATION		

NEHRU COLLEGE OF ENGINEERING & RESEARCH CENTRE
PAMPADY THIRUVILWAMALA, THRISSUR DT.

PRINCIPAL
Nehru College of
Engineering and Research Centre
Pampady, Thiruvilwamala, Thrissur Dt
Pin 680 597 Kerala

Scanned by TapScanner

III	Fuel injection and Ignition system: Introduction -fuel system components-electronic fuel system-fuel injection-types-throttle body versus port injection-electronic control fuel injection-operation-different types-fuel injectors-idle speed control-continuous injection system-high pressure diesel fuel injection – multi point fuel injection system –Electronic ignition system-operation-types-Electronic spark timing control.	7	15%
IV	Safety and comfort : antilock braking system-traction control system-electric seats- mirrors and sun roofs- central locking and electric windows-cruise control-electric power steering-electronic clutch-electronic suspension system-airbags	7	15%
SECOND INTERNAL EXAMINATION			
V	Electric vehicles and hybrid vehicles: Introduction-Electric Vehicle development- system layout- basic system components-fuel cell Electric vehicle. Hybrid vehicle: series Hybrid Vehicle - parallel Hybrid Vehicle-CNG Electric hybrid vehicle.	7	20%
VI	Vehicle Intelligence: Introduction -basic structure-vision based autonomous road vehicles-architecture for dynamic vision system -features-applications. An application of mobile robot vision to a vehicle information system-object detection-collision warning and Avoidance system-low tire pressure warning system.	7	20%
END SEMESTER EXAM			

QUESTION PAPER PATTERN

Maximum Marks : 100 Exam Duration:3 hours

PART A: FIVE MARK QUESTIONS

8 compulsory questions –1 question each from first four modules and 2 questions each from last two modules (8 x 5= 40 marks)

PART B: 10 MARK QUESTIONS

5 questions uniformly covering the first four modules. Each question can have maximum of three sub questions, if needed. Student has to answer any 3 questions

(3 x10 = 30 marks)

PART C: 15 MARK QUESTIONS

4 questions uniformly covering the last two modules. Each question can have maximum of four sub questions, if needed. Student has to answer any two questions

(2 x15 = 30 marks)

NEHRU COLLEGE OF ENGINEERING & RESEARCH CENTRE PAMPADY THIRUVILWAMALA, THRISSUR DT.

PRINCIPAL
Nehru College of
Engineering and Research Centr
Pampady Thiruvilwamala, Thrissur Dt
Pin 680 597 Kerala

Scanned by TapScanner

NEHRU COLLEGE OF ENGINEERING AND RESEARCH CENTRE
(NAAC Accredited)
(Approved by AICTE, Affiliated to APJ Abdul Kalam Technological University, Kerala)

Master of Computer Applications

2017-20

Course code	Course Name	L-T-P - Credits	Year of Introduction
RLMCA101	Problem Solving & Computer Programming	3-1-0-4	2016

Course Objectives

- To introduce a basic step towards Software Development
- To learn the C language
- To develop the programming skill, using C language

Syllabus

Program Development, Structured Programming, Introduction to C, Operators and Expressions, Data Input and Output, Control Statements, Functions, Program Structure, Arrays, Strings, Structure and Union, Pointers, File Handling, Low Level Programming, Additional Features of C.

Expected Outcome

The students will be able to

i. Solve problems systematically and to implement the solution in C language.
ii. Develop programming skills
iii. Develop the knowledge of how to learn a programming language, which will help in learning other Computer Languages in the curriculum

References

1. A. N. Kamthane, "Programming in C", Pearson Education, 3rd Edition (2015)
2. Brian W Kernighan & Dennis Ritchie, "The C programming language", 2nd Edition, Prentice Hall (2015)
3. Byron S Gottfried, "Programming with C", Schaum's outline, 3rd Edition, McGraw Hill
4. K N King, "C Programming: A Modern Approach", W. W. Norton & Co, 2nd Edition (1996)
5. Reema. Thareja, "Programming in C", Oxford University Press, 2nd Edition (2016)
6. Stephen Prata K, "C Primer Plus", Pearson Education, 5th Edition (2013)

Suggested MOOC

1. https://www.edx.org/course/programming-basics-iitbombayx-cs101-1x
2. http://ocw.mit.edu/courses/electrical-engineering-and-computer-science/6-087-practical-programming-in-c-january-iap-2010/

Course Plan

Module	Contents	Hours	Sem. Exam Marks
I	Introductory concepts: Program Development - Algorithm, Flowchart, Pseudocode, Structured Programming – Program Design, Modular Programming, Structuring of Control Flow. Introduction to C Language: The C character set, identifiers and keywords, data types, constants, variables and arrays, declarations, expressions, statements, Symbolic Constants, Library Functions.	8	10%
II	Operators and expressions: Arithmetic operators, Unary operators, Relational and Logical operators, Assignment operators, Conditional operator. Data input and output: Single character input, single character output, scanf, printf, puts, gets, functions, interactive programming.	8	10%
FIRST INTERNAL EXAMINATION			

NEHRU COLLEGE OF ENGINEERING & RESEARCH CENTRE PAMPADY, THIRUVILWAMALA, THRISSUR-DT
M.C.A. NEHRU COLLEGE OF ENGINEERING & RESEARCH CENTRE PAMPADY
PRINCIPAL
Nehru College of
Engineering and Research Centre
Pampady, Thiruvilwamala, Thrissur Dt
Pin 680 597 Kerala

III	Control statements: Branching - if else statement, Looping, nested control structure, switch statement, break statement, continue statement, comma operator, go to statement. Functions: Overview, function prototypes, passing arguments to a function, recursion. Program structure: Storage classes, automatic variables, external variables, static variables, multi file program, Library files, Header files.	12	20%
IV	Arrays: Defining an array, passing array to functions, multidimensional arrays. Strings: Defining a string, Null Character, Initialization, Reading, writing and processing a string. Structures and unions: Defining a structure, processing a structure, user defined data types, structure and pointers*, passing structure to function*, self-referential structures*, union.	9	20%
V	Pointers: Fundamentals, Declaration, Passing pointers to a function, pointers and one dimensional arrays, dynamic memory allocation, operations on pointers, pointers and multidimensional arrays, array of pointers, Array of strings, pointers and variable length arguments list, passing functions to other functions.	9	20%
SECOND INTERNAL EXAMINATION			
VI	File Handling: opening and closing a data file, reading and writing a data file, processing a data file, unformatted data file, Random accessing. Low level programming: Register variable, bitwise operations, bit fields. Additional features of C: Enumeration, Command line parameters, Macros, C Preprocessor.	9	20%
END SEMESTER EXAM			
QUESTION PAPER PATTERN			

There will be two parts in the Question paper - **Part A and Part B.**

Part A will have 8 short answer questions of 3 marks each (8 X 3 M = 24 M). There will be no choice questions.

Part B will have 6 essay questions one from each module of 6 marks each, with an alternative choice question from the same module (6 x 6M=36M). The maximum number of sub part questions in **Part B** to be limited to 2.

The total marks assigned to questions in Part A (Short answer) and Part B (Essay) together from a single module will not exceed the marks assigned to that module specified in the course plan.

**May be covered after Module V*

NEHRU COLLEGE OF ENGINEERING & RESEARCH CENTRE Pampady Thiruvilwamala Thrissur

M.C.A. NEHRU COLLEGE OF ENGINEERING AND RESEARCH CENTRE

PRINCIPAL
Nehru College of
Engineering and Research Centre
Pampady, Thiruvilwamala Thrissur Dt
Pin 680 597 Kerala

Course code	Course Name	L-T-P - Credits	Year of Introduction
RLMCA102	Object Oriented Programming	3-1-0-4	2016

Course Objectives

- To understand the concepts of object-oriented programming paradigms and develop skills in these paradigms using Java.
- To provide an overview of characteristics of Java Applets, Exceptions, Multithreading, Streams, Networking etc

Syllabus

Introduction to Object Oriented concepts - Java Basics - Arrays and Strings -Inheritance – Polymorphism – Interface – Packages - Exception Handling -Multithreaded Programming – Streams-Applets –Networking.

Expected Outcome

The students will

i. Design the classes needed, given a problem specification.
ii. Implement the designed classes using the object oriented programming language.
iii. Learn how to test, verify, and debug object-oriented programs and create programs using object oriented principles.

References

1. C. Thomas Wu, "An introduction to Object-oriented programming with Java", Fourth Edition, Tata McGraw-Hill Publishing company Ltd.
2. Cay S. Horstmann and Gary Cornell, "Core Java: Volume I – Fundamentals", Eighth Edition, Sun Microsystems Press.
3. Herbert Schildt, "Java The Complete Reference", Seventh Edition, Tata McGraw-Hill Edition
4. K. Arnold and J. Gosling, "The JAVA programming language", Third edition, Pearson Education.
5. Paul Deitel and Harvey Deitel, "Java, How to Program", Tenth Edition, Pearson Education
6. Rohit Khurana, "Programming with Java", Vikas Publishing, 2014.
7. Timothy Budd, "Understanding Object-oriented programming with Java", Updated Edition, Pearson Education.
8. Y. Daniel Liang, "Introduction to Java programming", Seventh Edition, Pearson Education.

Course Plan

Module	Contents	Hours	Sem. Exam Marks
I	Introduction: Need for OOP paradigm, Procedural approach vs. Object-Oriented approach. Object Oriented concepts Java Basics: History of Java, Java features, data types, variables, operators, expressions, control statements, type conversion and casting, Concepts of - classes, objects, constructors, Access Specifiers (public, private, protected, friendly), Access Modifiers (static, final, abstract, native, synchronized), overloading methods, recursion, nested and inner classes	9	20%
II	Inheritance: Generalizations vs. Specialization, Inheriting data members and methods, Single and Multilevel inheritance, use of super and this keywords. Polymorphism- method overriding, dynamic method dispatch, abstract and final classes	9	20%
FIRST INTERNAL EXAMINATION			

III	Arrays and Strings: One dimensional arrays, Multidimensional arrays, exploring String class and methods, String Buffer class. Interface: creation and implementation of an Interface. Packages - creating and accessing a package, importing packages, creating user defined packages	8	15%
IV	Exception Handling: benefits of exception handling, exception hierarchy, usage of try, catch, throw, throws and finally, built-in exceptions, creating own exception sub classes. Multithreaded Programming: thread life cycle, creating threads, thread priorities, synchronizing threads, Inter Thread Communication.	9	15%
V	Exploring Java I/O, Streams, Byte Streams, Character Streams, Random Access Files, Object Streams.	10	15%
SECOND INTERNAL EXAMINATION			
VI	Applets – Applets and Applications, life cycle of an applet, passing parameters to an applet, HTML tags. Working with Graphics, Colors. Networking: client-server model, Sockets, Inlet Address, TCP sockets – Server Socket and Socket classes, UDP Sockets – Datagram Socket, Datagram Packets.	10	15%
END SEMESTER EXAM			
QUESTION PAPER PATTERN			

There will be two parts in the Question paper - **Part A and Part B**.
Part A will have 8 short answer questions of 3 marks each (8 X 3 M = 24 M). There will be no choice questions.
Part B will have 6 essay questions one from each module of 6 marks each, with an alternative choice question from the same module (6 x 6M=36M). The maximum number of sub part questions in **Part B** to be limited to 2.
The total marks assigned to questions in Part A (Short answer) and Part B (Essay) together from a single module will not exceed the marks assigned to that module specified in the course plan.

NEHRU COLLEGE OF ENGINEERING & RESEARCH CENTRE PAMPADY THIRUVILWAMALA THRISSUR-DT

NEHRU COLLEGE OF ENGINEERING AND RESEARCH CENTRE M.C.A. PAMPADY

PRINCIPAL
Nehru College of
Engineering and Research Centre
Pampady, Thiruvilwamala, Thrissur Dt
Pin 680 597 Kerala

Course code	Course Name	L-T-P - Credits	Year of Introduction
RLMCA104	Data Structures	3-1-0-4	2016

Course Objectives

- To provide an insight into data structures such as arrays linked lists, stacks, queues, trees and graphs.
- To provide an understanding of searching and sorting methods.

Syllabus

Data structures: Definitions, Concept and Overview of data structures - Analysis of Algorithm-Asymptotic Complexity of an algorithm.

Arrays, Operations on Arrays, Applications - Linked List, Applications of Linked Lists, Stacks and Queues: Stack Operations, Applications of Stacks, Queues - Operations on Queues, Different Types of Queues, Applications of Queues - Trees, Binary Trees, Traversals, BST, Introduction to AVL trees.

Graphs: Traversals, Minimum Spanning Trees and shortest path algorithms

Internal and External sorting techniques – selection, bubble, insertion, merge sorting, partition exchange sorting, heap sort, Counting Sort, Searching - External sorting – sorting with disks, sorting with tapes

Expected Outcome

- The students will be able to choose appropriate data structure for solving problems considering resource constraints such as time and space.

References

1. A N Kamthane , "Introduction to Data Structures in C", Pearson Education (2005)
2. Alfred V. Aho, John E. Hopcroft, Jeffrey D. Ullman "Data structures and Algorithms", Fourth Edition, Pearson Education (2009)
3. G A V Pai , "Data Structures and Algorithms: Concepts, Techniques and Applications", 2nd Edition, Tata McGraw-Hill (2008)
4. J. P. Tremblay , P. G. Sorenson, "An Introduction to Data Structures with applications", 2nd Edn, McGraw Hill, Inc. New York, NY, USA.
5. Samanta, "Classic Data Structures", 2nd Edition, PHI.
6. Seymour Lipschutz, "Data Structures", 6th Edition, 9th Reprint 2008, Tata McGraw-Hill
7. Thomas H. Corman, Charles E. Leiserson and Ronald L. Rivest., "Introduction to Algorithms", 3rd Edition, Prentice Hall of India.

Course Plan

Module	Contents	Hours	Sem. Exam Marks
I	Data structures: Definitions, Overview of data structures-Analysis of Algorithm-Asymptotic Complexity of an algorithm. Arrays: Definition, Terminology, One dimensional Array, Two dimensional array, Multidimensional array, Representation of Arrays in Memory, Operations on Arrays, Applications of Arrays, Sparse Matrices Manipulation.	7	10%
II	Stack-Introduction, Representation of a Stack, Operations on Stacks, Applications of Stacks - Evaluation of Arithmetic expressions – Recursion and Iteration	9	15%
FIRST INTERNAL EXAMINATION			

NEHRU COLLEGE OF ENGINEERING & RESEARCH CENTRE PAMPADY THIRUVILWAMALA, THRISSUR DT
M.C.A. NEHRU COLLEGE OF ENGINEERING AND RESEARCH CENTRE
PRINCIPAL Nehru College of Engineering and Research Centre Pampady Thiruvilwamala, Thrissur Dt Pin 680 597 Kerala

III	Queues-Introduction, Representation of a queue -Operations on Queues, Circular Queues, Deque, Priority Queue, Applications of Queues.	9	15%
IV	Linked List - Singly Linked Lists, Circular Linked Lists, Doubly Linked Lists - Applications of Linked Lists- Polynomial Representation-Linked stacks and Queues.	10	20%
V	Trees, Binary Trees, Representation and Traversals, BST and operations –Introduction to AVL trees. Graphs: Definitions and Basic Terminologies, Representations of Graphs, Traversals, Minimum Spanning Tree and shortest path algorithms	10	20%
SECOND INTERNAL EXAMINATION			
VI	Internal sorting – selection, bubble, insertion, merge sorting, and partition exchange sorting, heap sort, Counting Sort. Time Complexities- comparisons. Searching – linear search, binary search.	10	20%
END SEMESTER EXAM			
QUESTION PAPER PATTERN			

There will be two parts in the Question paper - **Part A and Part B.**

Part A will have 8 short answer questions of 3 marks each (8 X 3 M = 24 M). There will be no choice questions.

Part B will have 6 essay questions one from each module of 6 marks each, with an alternative choice question from the same module (6 x 6M=36M). The maximum number of sub part questions in **Part B** to be limited to 2.

The total marks assigned to questions in Part A (Short answer) and Part B (Essay) together from a single module will not exceed the marks assigned to that module specified in the course plan.

NEHRU COLLEGE OF ENGINEERING & RESEARCH CENTRE THIRUVILWAMALA, PAMPADY, THRISSUR

M.C.A.

PRINCIPAL
Nehru College of
Engineering and Research Centre
Pampady, Thiruvilwamala, Thrissur Dt
Pin 680 597 Kerala

III	Inter process communication – shared memory – message passing. Process Co-ordination - Synchronization - the critical section problem – Petersons solution – Synchronization hardware – Semaphores – usage and implementation – the bounded buffer problem. *Programming assignments using pipes and semaphores to be given to introduce students to process communication and synchronization.*	7	15%
IV	Dead locks – system model & characterization – methods for handling deadlocks - prevention - avoidance - bankers algorithm - detection - Recovery from dead lock. Memory management - Preliminaries – address binding – logical and physical address space - Swapping - Contiguous memory allocation – fragmentation - paging – with TLB – protection – hierarchical page table structure – segmentation hardware.	11	20%
V	Virtual memory concepts - demand paging - page replacement – different types – frame allocation – algorithms – thrashing. Secondary storage structure – Overview – disk structure - disk scheduling - FCFS, SST, CSCAN - selecting a disk scheduling algorithm.	11	20%
SECOND INTERNAL EXAMINATION			
VI	Storage management - File concepts – attributes – operations – types – structure – access methods. Directory and disc structure –overview – directory schemes – single level – two level – tree structured – acyclic and general graph directories. File system mounting. Protection – types of access – access control. File system – structure and implementation. Directory implementation – File allocation methods – Free space management using link list only. *Programming assignments using create, open, read, write and close system calls to be given to introduce students to file system calls. Students can be asked to code system programs using the above system calls.*	11	20%
END SEMESTER EXAM			
QUESTION PAPER PATTERN			

There will be two parts in the Question paper - **Part A and Part B.**

Part A will have 8 short answer questions of 3 marks each (8 X 3 M = 24 M). There will be no choice questions.

Part B will have 6 essay questions one from each module of 6 marks each, with an alternative choice question from the same module (6 x 6M=36M). The maximum number of sub part questions in **Part B** to be limited to 2.

The total marks assigned to questions in Part A (Short answer) and Part B (Essay) together from a single module will not exceed the marks assigned to that module specified in the course plan.

PRINCIPAL
Nehru College of
Engineering and Research Centre
Pampady Thiruvilwamala Thrissur Dt
Pin 680 597 Kerala

Course No.	Course Name	L-T-P Credits	Year of Introduction
RLIMCA381	Elective III- Cloud Computing	3-1-0-4	2016

Course Objectives

- Understand the main concepts and features of Cloud Computing
- Understand when enterprises should choose Cloud Services
- Understand current cloud providers and the offerings
- Understand cloud services and its applications

Syllabus

Introduction to Cloud Computing - The Value Proposition of Cloud computing - Using Cloud Platforms - Exploring Cloud Infrastructures - Details of Cloud Services and its Applications - Using the Mobile Cloud

Expected Outcome

- At the end of the course, students should be able to understand the basics of Cloud computing and be able to would be able to understand different cloud offering and its applications.

Text Book

1. Peter Waher, "Cloud Computing Bible", John Wiley & Sons Publishing, 2011

Reference Books

1. Michael Kavis, "Architecting the Cloud: Design Decisions for Cloud Computing Service Models (SaaS, PaaS, and IaaS)", John Wiley & Sons Publishing, 2014
2. Jothy Rosenberg; Arthur Mateos, "The Cloud at Your Service: The when, how, and why of enterprise cloud computing", Manning Publications , 2010

Suggested MOOC

1. https://www.coursera.org/specializations/cloud-computing
2. http://ocw.mit.edu/courses/sloan-school-ofmanagement/15-768-management-of-services-conceptsdesign-and-delivery-fall-2010/lecture-notes/

NEHRU COLLEGE OF ENGINEERING & RESEARCH CENTRE
THIRUVILWAMALA
PIN-680597
THRISSUR DT. KERALA
PRINCIPAL
Nehru College of
Engineering and Research Centre
Pampady, Thiruvilwamala, Thrissur Dt
Pin 680 597 Kerala

Course Plan			
Module	**Contents**	**Hours Allotted**	**% of marks in End-Semester Examination**
I	Defining Cloud Computing - Cloud Types- Characteristics of Cloud Computing - Open Standards - Value of Cloud for Enterprises - Understanding Cloud Architectures - Understanding Services and Applications by Type - IaaS vs. PaaS vs. SaaS	8	15
II	Virtualization Technologies - Load Balancing and Virtualization- Hypervisors - Machine Imaging - Porting Applications- Capacity Planning - Baselines and Metrics - Network Capacity - Scaling - Exploring Platform as a Service - Using Google Web Services	8	15
FIRST INTERNAL EXAM			
III	Using the prominent cloud services - Google Cloud Services - Amazon Web Services - Microsoft Cloud Services - Google Cloud Services - Demonstration/Tutorial on exploring cloud services on either Amazon/Azure/Google Cloud platform	8	15
IV	Managing the Cloud - Cloud Management Products - Industry Standards - Understanding Cloud Security - Securing the Cloud - Establishing Identity and Presence	8	20
V	Understanding Service Oriented Architecture - Moving Applications to the Cloud - Working with Cloud-Based Storage - Working with Productivity Software - Using Webmail Services - Communicating with the Cloud - Using Media and Streaming	10	20
SECOND INTERNAL EXAM			
VI	Working with Mobile Devices - Smartphones accessing cloud services - Cloud Mobile Web Service - Service Types - Service Discovery - Microservice architecture	8	15
END SEMESTER EXAM			

NEHRU COLLEGE OF ENGINEERING & RESEARCH CENTRE
Pampady
THIRUVILWAMALA
THRISSUR-DT

M.C.A.
NEHRU COLLEGE OF ENGINEERING AND RESEARCH CENTRE

PRINCIPAL
Nehru College of
Engineering and Research Centre
Pampady, Thiruvilwamala Thrissur Dt
Pin 680 597 Kerala

QUESTION PAPER PATTERN			
	There will be two parts in the Question paper - Part A and Part B. Part A will have 8 short answer questions of 3 marks each (8 X 3 M = 24 M). There will be no choice questions. Part B will have 6 essay questions one from each module of 6 marks each, with an alternative choice question from the same module (6 x 6M=36M).The maximum number of sub part questions in Part B to be limited to 2. The total marks assigned to questions in Part A (Short answer) and Part B (Essay) together from a single module, not to exceed the marks assigned to that module specified in the course plan in the syllabus.		

NEHRU COLLEGE OF ENGINEERING & RESEARCH CENTRE PAMPADY THIRUVILWAMALA THRISSUR-DT

M.C.A. NEHRU COLLEGE OF ENGINEERING AND RESEARCH CENTRE PAMPADY

PRINCIPAL
Nehru College of
Engineering and Research Centre
Pampady Thiruvilwamala, Thrissur Dt
Pin 680 597 Kerala

Course No.	Course Name	L-T-P Credits	Year of Introduction
RLIMCA371	Elective II- Social Network Analysis	3-1-0-4	2016

Course Objectives

- To provide students with essential knowledge of network analysis applicable to real world data, with examples from today's most popular social networks.

Syllabus

Introduction to Social Network Analysis - Social Media Examples - Electronic Sources for Network Analysis - Mathematical Representations of Social Networks - Modelling and Aggregating Social Network Data - Semantic based Social Network Analysis - Case Studies

Expected Outcome

At the end of the course, students will be able to :

- Understand the importance of social media and networks
- Enhance analytical skills for analyzing social media and networking data
- Create real - life case studies using social media data

References

1. Peter Mika, "Social Networks and the Semantic Web", Springer, 2007
2. Hansen, Derek, Ben Shneiderman, Marc Smith, "Analyzing Social Media Networks with NodeXL: Insights from a Connected World", Morgan Kaufmann, 2011
3. Stanley Wasserman and Katherine Faust. "Social Network Analysis. Methods and Applications." Cambridge University Press, 1994
4. Christina Prell, "Social Network Analysis: History, Theory and Methodology", SAGE Publications Ltd, 2012

Suggested MOOC

1. http://nptel.ac.in/courses/106106146
2. https://www.politaktiv.org/documents/10157/29141/SocNet_TheoryApp.pdf
3. https://www.mooc-list.com/course/social-network-analysis-coursera

NEHRU COLLEGE OF ENGINEERING & RESEARCH CENTRE
PAMPADY
THIRUVILWAMALA
THRISSUR-DT

PRINCIPAL
Nehru College of
Engineering and Research Centre
Pampady, Thiruvilwamala, Thrissur Dt
Pin 680 597 Kerala

Course Plan			
Module	**Contents**	**Hours Allotted**	**% of marks in End-Semester Examination**
I	Introduction to Social Network Analysis - Network Analysis - Key Concepts and Measures in Network Analysis - Global Structure of Networks, Macro Structure of Social Networks, Personal Networks Relevant Portions from Text 1	8	15
II	Social Media Examples: Asynchronous Threaded Conversation - Synchronous Conversation - World Wide Web - Collaborative Authoring - Blogs and Podcast - Social Sharing - Electronic sources for network analysis - Electronic discussion networks - Blogs and online communities - Web based networks. Text 2 and Text 1	10	20
FIRST INTERNAL EXAM			
III	Mathematical Representations of Social Networks - Notations for Social data - Graph Theoretic Notation, Sociometric Notation, Algebraic Notation - Sets of Actors Text 1	8	15
IV	Modelling and Aggregating Social Network Data : Ontological representation of social individuals - Ontological representation of social relationships - Aggregating and reasoning with social network data - Representing identity - Determining equality - Reasoning with instance equality- Evaluating Smushing Text 1	10	20
V	Developing social-semantic applications : Building Semantic Web applications with social network features - The generic architecture of Semantic Web applications - Sesame - Elmo - Flink : the social networks of the Semantic Web community - Features of Flink. Text 1	10	15
SECOND INTERNAL EXAM			
VI	Social Media Network Analysis Case Studies - Email - Twitter - Visualizing and Interpreting Facebook Networks - YouTube: Contrasting Patterns of Interaction and Prominence. Text 2		15
END SEMESTER EXAM			

NEHRU COLLEGE OF ENGINEERING & RESEARCH CENTRE PAMPADY THIRUVILWAMALA, THRISSUR-DT
M.C.A. NEHRU COLLEGE OF ENGINEERING AND RESEARCH CENTRE PAMPADY
PRINCIPAL
Nehru College of
Engineering and Research Centre
Pampady Thiruvilwamala, Thrissur Dt
Pin 680 597 Kerala

QUESTION PAPER PATTERN			
	There will be two parts in the Question paper -**Part A and Part B.** **Part A** will have 8 short answer questions of 3 marks each (8 X 3 M = 24 M). There will be no choice questions. **Part B** will have 6 essay questions one from each module of 6 marks each, with an alternative choice question from the same module (6 x 6M=36M).The maximum number of sub part questions in **Part B** tobe limited to 2. The total marks assigned to questions in Part A (Short answer) and Part B (Essay) together from a single module, not to exceed the marks assigned to that module specified in the course plan in the syllabus.		

NEHRU COLLEGE OF ENGINEERING & RESEARCH CENTRE
PAMPADY
THIRUVILWAMALA,
THRISSUR DT.

M.C.A.

PRINCIPAL
Nehru College of
Engineering and Research Centre
Pampady, Thiruvilwamala, Thrissur Dt
Pin 680 597 Kerala

Course No.	Course Name	L-T-P Credits	Year of Introduction
RLMCA305	Cryptography and Cyber Security	3-1-0-4	2016

Course Objectives

- Provide basic mathematical concepts used in Cryptography.
- Provide basic understanding of various cryptographic algorithms.
- Provide basic understanding of Hashing techniques, Digital Signature schemes and key management techniques.
- Provide basic understanding of crypto currencies and bitcoins
- Provide an understanding of network security implementation at application layer, transport layer, and network layer and the protocols used.

Syllabus

Introduction to Cryptography, Security architecture and classical encryption schemes, Number theory basics, Conventional symmetric key encryption techniques, Public key cryptography, Digital signatures, Message Authentication codes and Hash functions, Crypto currencies and bitcoins, Cyber Security, Email Security, IP Security and Web Security.

Expected Outcome

At the end of the course, students will be able to

1. *Build cryptosystems using various Symmetric and Asymmetric encryption techniques.*
2. *Apply the concepts of different message authentication and digital signature techniques to applications for ensuring secure transactions.*
3. *Apply security services to applications at Application, Transport and Network layer.*

References

1. William Stallings, Cryptography and Network Security, 6th Edition, Pearson Education, March 2013.
2. Behrouz A. Forouzan, "Cryptography and Network Security", Tata McGraw-Hill Publishing(2e 2011)
3. Charlie Kaufman, Radia Perlman and Mike Speciner, "Network Security", Prentice Hall of India, 2002.
4. Manuel Mogollon, "Cryptography and Security Services – Mechanisms and Applications",Cybertech Publishing.
5. William R. Cheswick, Steven M. Bellovin, Aviel D. Rubin, "Firewalls and Internet Security", Addison-Wesley

PRINCIPAL
Nehru College of
Engineering and Research Centre
Pampady, Thiruvilwamala, Thrissur Dt
Pin 680 597 Kerala

6. Arvind Narayanan, Joseph Bonneau, Edward Felten, Andrew Miller, Steven Goldfeder, "Bitcoin and Cryptocurrency technologies", Princeton University Press

Suggested MOOC

1. **https://www.coursera.org/learn/crypto**
2. **https://www.coursera.org/learn/cryptocurrency**
3. **https://www.coursera.org/learn/crypto2**

NEHRU COLLEGE OF ENGINEERING AND RESEARCH CENTRE * PAMPADY * M.C.A.

NEHRU COLLEGE OF ENGINEERING & RESEARCH CENTRE * THIRUVILWAMALA, THRISSUR DT.

PRINCIPAL
Nehru College of
Engineering and Research Centre
Pampady Thiruvilwamala Thrissur Dt
Pin 680 597 Kerala

Course Plan			
Module	Contents	Hours Allotted	% of marks in End-Semester Examination
I	**Introduction to Cryptography**: Services, Mechanisms and attacks-Phishing, ransomware, DoS attack, OSI security architecture-Network security model-Classical Encryption techniques (Symmetric cipher model, substitution techniques, transposition techniques, steganography).	8	15%
II	**Mathematical Background:Elementary number theory:** Prime numbers, Fermat's and Euler's theorems, Testing for primality, **Modular Arithmetic**: Congruences, Chinese remainder theorem. **Finite fields**: Review of groups, rings and fields; Finite fields of the form GF(p), Polynomial Arithmetic, Finite fields of the form GF(2").Discrete logarithms Euclidean Algorithms.	12	15%
FIRST INTERNAL EXAM			
III	**Conventional Symmetric Key Encryption:Block** ciphers and Stream Ciphers, Modes of operation (ECB, CBC, CFB, OFB), multiple encryption, Data Encryption Standard-Block cipher principles-block cipher modes of operation-Advanced Encryption Standard (AES)-Triple DES. **Public key cryptography:** Principles of public key cryptosystems-The RSA algorithm-Key management – Diffie Hellman Key exchange-Elliptic curve arithmetic-Elliptic curve cryptography.	8	20%
IV	**Hash Functions and MAC**: Properties of hash functions, birthday attack, hash-cash, Message Authentication Code Algorithms, MAC protocols, HMAC, CBC-MAC. **Digital Signatures:** Classification of signature schemes, RSA signature, Digital Signature Standard, one time signature schemes, attacks on Digital Signatures, Blind Signatures.	8	15%
V	**Cryptocurrencies and Bitcoins: A Simple Cryptocurrency**: GoofyCoin, ScroogeCoin, **How Bitcoin Achieves Decentralization:** Centralization vs. Decentralization, Distributed consensus, Consensus without identity. **Mechanics of Bitcoin**: Bitcoin transactions, Bitcoin Scripts, Applications of Bitcoin scripts, Bitcoin blocks, The Bitcoin network, **How to Store and Use Bitcoins**: Simple Local Storage, Hot and Cold Storage, Splitting and	8	15%

PRINCIPAL
Nehru College of
Engineering and Research Centre
Pampady, Thiruvilwamala, Thrissur Dt
Pin 680 597 Kerala

	Sharing Keys, Online Wallets and Exchanges, Payment Services, Transaction Fees, Currency Exchange Markets		
	SECOND INTERNAL EXAM		
VI	**Introduction to Cyber Security, E-mail Security:** Security Services for E-mail-attacks possible through E-mail – establishing keys privacy-authentication of the source-Message Integrity-Non-repudiation-Pretty Good Privacy-S/MIME. **IPSecurity:** Overview of IPSec – IPv4 and IPv6-Authentication Header-Encapsulation Security Payload (ESP)-Internet Key Exchange. **Web Security:** SSL/TLS Basic Protocol-computing the keys- client authentication-PKI as deployed by SSL Attacks fixed in v3- Exportability-Encoding-Secure Electronic Transaction (SET).	10	20%
	END SEMESTER EXAM		
	QUESTION PAPER PATTERN		
	There will be two parts in the Question paper -**Part A and Part B.** **Part A** will have 8 short answer questions of 3 marks each (8 X 3 M = 24 M). There will be no choice questions. **Part B** will have 6 essay questions one from each module of 6 marks each, with an alternative choice question from the same module (6 x 6M=36M).The maximum number of sub part questions in **Part B** tobe limited to 2. The total marks assigned to questions in Part A (Short answer) and Part B (Essay) together from a single module, not to exceed the marks assigned to that module specified in the course plan in the syllabus.		

Estd. 2014
NEHRU COLLEGE OF ENGINEERING AND RESEARCH CENTRE PAMPADY THIRUVILWAMALA, THRISSUR DT.
NEHRU COLLEGE OF ENGINEERING AND RESEARCH CENTRE M.C.A. PAMPADY
PRINCIPAL
Nehru College of
Engineering and Research Centre
Pampady, Thiruvilwamala, Thrissur Dt
Pin 680 597 Kerala

Course code	Course Name	L-T-P - Credits	Year of Introduction
RLMCA203	Software Engineering	3-1-0-4	2016

Course Objectives

- To assist the student in understanding the basic theory of software engineering, and to apply these basic theoretical principles to a software development project.

Syllabus

Introduction to Software Engineering, Fundamentals of Agile Development, Scrum Framework, Industry Trends.

Expected Outcome

At the end of the course, students will

i. Learn the theory and foundations of software engineering.
ii. Learn the different process models and choose the best model for their project
iii. Be able to construct requirement models
iv. Be able to Understand the different development practices and its advantages
v. Be able to create test cases and implement different testing strategies
vi. Understand the environment and work culture in a software organization

References

1. Alistair Cockburn, "Agile Software Development: The Cooperative Game", Addison Wesley, 2nd Edition (2006).
2. Andrew Hunt, David Thomas, "The Pragmatic Programmer: From Journeyman to Master", Pearson India, 1st Edition (2008).
3. Ken Schwaber, Mike Beedle, "Agile Software Development with Scrum", Pearson (2008).
4. Lisa Crispin, Janet Gregory, "Agile Testing: A Practical Guide for Testers and Agile Teams", Addison Wesley Professional, 1st Edition (2008).
5. Mike Cohn, "User Stories Applied: For Agile Software Dvelopment", Addison Wesley, 1st Edition, (2004).
6. Pressman, R.S., "Software Engineering: A Practitioner's Approach", McGraw Hill SE, 7th Edition, (2010).
7. Robert C. Martin, "Agile Software Development, Principles, Patterns and Practices", Prentice Hall Imprint, Pearson Education, 2nd Edition (2002).
8. Rod Stephens, "Beginning Software Engineering", Wrox Series, Wiley India Pvt Ltd (2015).
9. RyPress "Ry's Git Tutorial" (Free e-book)

Suggested MOOC

- Introduction to DevOps (https://www.edx.org/course/introduction-devops-microsoft-dev212x)

Course Plan

Module	Contents	Hours	Sem. Exam Marks
I	Introduction to Software Engineering - What is Software Engineering - Why is software engineering important, Details around requirements gathering, Software design, Development, Testing, Deployment, Maintenance. Planning phase – project planning objective, software scope, empirical estimation, models, COCOMO, staffing and personal planning.	9	15%
II	Software Engineering models - Predictive software engineering models and its application - Model Approaches – Prerequisites - predictive and adaptive waterfall - waterfall with feedback - Sashimi - incremental waterfall - V model	8	20%

NEHRU COLLEGE OF ENGINEERING & RESEARCH CENTRE THIRUVILWAMALA
PRINCIPAL
Nehru College of Engineering and Research Centre
Pampady, Thiruvilwamala, Thrissur Dt
Pin 680 597 Kerala
M.C.A.
A P J Abdul Kalam Technological University

	System development life cycle - Iterative vs Predictive – prototypes - Spiral - unified process - Cleanroom - Rapid Application development principles – risk management.		
FIRST INTERNAL EXAMINATION			
III	Fundamentals of Agile Development - Introduction to agility, Agile Principles, Overview of Scrum, Extreme Programming, Feature Driven development, Lean Software Development, Agile project management. Design and development practices in Agile projects, Test Driven Development, Continuous Integration, Refactoring, Pair Programming, Simple Design, User Stories, Agile Testing, Agile Tools - Agile design practices, Role of design Principles including Single Responsibility Principle, Open Closed Principle, Liskov Substitution Principle, Interface Segregation Principles, Dependency Inversion Principle in Agile Design, Need and significance of Refactoring, Refactoring Techniques. The Agile lifecycle and its impact on testing, Test-Driven Development (TDD), JUnit framework and tools for TDD, Testing user stories - acceptance tests and scenarios, Planning and managing testing cycle, Exploratory testing, Risk based testing, Regression tests, Test Automation, Tools to support the Agile tester.	11	20%
IV	Scrum Framework - Introduction to Scrum, Project phases, Agile Estimation, Planning game, Product backlog, Sprint backlog, Iteration planning, User story definition, Characteristics and content of user stories, Acceptance tests and Verifying stories, Project velocity, Burn down chart, Sprint planning and retrospective Daily scrum, Scrum roles - Product Owner, Scrum Master, Scrum Team, Scrum case study, Tools for Agile project management	8	15%
V	Pragmatic Programming in Software Engineering - Essential pragmatism in software engineering - Code maintainability - design by contract - assertive programming - Writing maintainable code - Ruthless testing – pride.	9	15%
SECOND INTERNAL EXAMINATION			
VI	Industry Trends - Introduction to DevOps - A unified process between development and operations - Continuous Integration (CI), continuous testing, and continuous deployment - Configuration management, release management, and monitoring and learning	8	15%
END SEMESTER EXAM			
QUESTION PAPER PATTERN			

There will be two parts in the Question paper - **Part A and Part B**.

Part A will have 8 short answer questions of 3 marks each (8 X 3 M = 24 M). There will be no choice questions.

Part B will have 6 essay questions one from each module of 6 marks each, with an alternative choice question from the same module (6 x 6M=36M). The maximum number of sub part questions in **Part B** to be limited to 2.

The total marks assigned to questions in Part A (Short answer) and Part B (Essay) together from a single module will not exceed the marks assigned to that module specified in the course plan.

PRINCIPAL
Nehru College of
Engineering and Research Centre
Pampady Thiruvilwamala Thrissur Dt
Pin 680 597 Kerala

Course code	Course Name	L-T-P - Credits	Year of Introduction
RLMCA205	Database Management Systems	3-1-0-4	2016

Course Objectives

- To develop and manage efficient and effective database applications that requires understanding the fundamentals of database management systems, techniques for the design of databases, and principles of database administration.

Syllabus

Introduction of database systems - Data modeling using Entity Relationship Model - Extended E-R features - The Relational model -Relational Query Languages. Introduction to SQL - Intermediate SQL - Advanced SQL - Database Design - Functional Dependencies - Foundations of Database Transaction Processing - Concurrency Control in databases - Overview of Data Mining and Data Warehousing Concepts.

Expected outcome

The students will

i. Understand the fundamentals of relational, object-oriented, and distributed database systems including: data models, database architectures, and database manipulations.
ii. Understand the theories and techniques in developing database applications and be able to demonstrate the ability to build databases

References

1. Abraham Silberschatz ,Henry F. Korth ,S. Sudarshan, "Database System Concepts", McGraw Hill Education, 6th Edition (2013) - (for Modules 1,2,3).
2. Ashutosh Kumar Dubay, "Database Management Concepts", S.K. Kataria & Sons, 1st Edition (2012).
3. Raghu Ramakrishnan and Johannes Gehrke, "Database Management Systems", McGraw Hill, 3rd Edition (2014).
4. Ramez Elmasri, Shamkant B.Navathe, "Database Systems ", Pearson Education, 6th Edition (2013) (for Modules 4,5,6).
5. Thomas M Connolly and Carolyn E Begg, "Database systems", Pearson Education, 4th Edition (2009) - (for Module 4).

Suggested MOOC

1. Data Manipulation at Scale: Systems and Algorithms (https://www.coursera.org/learn/data-manipulation)
2. Introduction to Databases (Coursera) (https://class.stanford.edu/courses/DB/2014/SelfPlaced/about)
3. Database Management Essentials (Coursera) (https://www.coursera.org/learn/database-management)
4. SQL(Stanford University) (https://lagunita.stanford.edu/courses/DB/SQL/SelfPaced/courseware)

Course Plan

Module	Contents	Hours	Sem. Exam Marks
I	Introduction: Purpose of database systems - View of data - Data models, schemas and instances - Database Languages - Database Users and Administrators. Data modeling using Entity Relationship Model - Entity sets, Relationship sets, attributes, Constraints – Keys – Entity Relationship Diagrams - Weak Entity Sets. Extended E-R features - Specialization and Generalization - Constraints on Specialization and Generalization.	9	15%

PRINCIPAL
Nehru College of Engineering and Research Centre
Pampady, Thiruvilwamala, Thrissur Dt
Pin 680 597 Kerala

II	The Relational model: Relational model concepts - Relational model constraints - Relational Databases and Relational Database Schemas. Relational Query Languages :The Relational Algebra - Examples of Queries in Relational Algebra.	9	15%
FIRST INTERNAL EXAMINATION			
III	Introduction to SQL: SQL Data Definition, Basic structure of SQL Queries, Additional Basic Operations, Set Operations, Null values, Aggregate functions, Nested Subqueries, Modifications of database Intermediate SQL: JOIN Expressions, Views, Transactions, Integrity Constraints, SQL Data types and schemas, Authorisation. Advanced SQL: Declaring and Invoking SQL Functions and Procedures, Triggers - Need for triggers, Triggers in SQL	11	20%
IV	Database Design: Functional Dependencies - Normal Forms: First Normal Form, Second Normal Form, Third Normal Form, Boyce Codd Normal Form, Multivalued Dependency and Fourth Normal Form, Join Dependencies and Fifth Normal Form. Inference Rules for Functional Dependencies, Minimal Sets of Functional Dependencies, Properties of Relational Decompositions.	9	20%
V	Foundations of Database Transaction Processing: Transactions, Database Items, Read and Write Operations and DBMS buffers, Transaction states, Desirable states of Transactions, Transactions and Schedules - Characterising Schedules based on Recoverability, Schedules of Transactions, Characterising Schedules Based on Recoverability, Characterising Schedules Based on Serializability, Serial, Non serial , and Conflict-Serializable Schedules, Testing for Conflict Serializability of a Schedule, View Equivalence and View Serializability. Concurrency Control in databases: Two - Phase Locking Techniques, Guaranteeing Serializability by Two-Phase Locking, Dealing with Deadlock and Starvation, Concurrency Control Based on Timestamp Ordering	9	20%
SECOND INTERNAL EXAMINATION			
VI	Overview of Data Mining and Data Warehousing Concepts - Data mining Technology, Association rules, Classifications, Clustering, Introduction of Data Warehousing - Characteristics of Data Warehouses, Data Modeling for Data Warehouses.	7	10%
END SEMESTER EXAM			

QUESTION PAPER PATTERN

There will be two parts in the Question paper - **Part A and Part B.**

Part A will have 8 short answer questions of 3 marks each (8 X 3 M = 24 M). There will be no choice questions.

Part B will have 6 essay questions one from each module of 6 marks each, with an alternative choice question from the same module (6 x 6M=36M). The maximum number of sub part questions in **Part B** to be limited to 2.

The total marks assigned to questions in Part A (Short answer) and Part B (Essay) together from a single module will not exceed the marks assigned to that module specified in the course plan.

NEHRU COLLEGE OF ENGINEERING AND RESEARCH CENTRE Pampady Thiruvilwamala Thrissur

PRINCIPAL
Nehru College of
Engineering and Research Centre
Pampady Thiruvilwamala, Thrissur Dt
Pin 680 597 Kerala

A.P.J Abdul Kalam Technological University

Course code	Course Name	L-T-P - Credits	Year of Introduction
RLMCA207	Design and Analysis of Algorithms	3-1-0-4	2016

Course Objectives

- To familiarize with algorithm design strategies.
- To learn to analyse and measure the performance of algorithms

Syllabus

Introduction to Algorithm Analysis, Divide and Conquer Method, Greedy Strategy, Dynamic Programming, Algorithm Design by State Space Trees – Backtracking - Branch and Bound, Introduction to Computational Complexity.

Expected Outcome

i. Given a problem, the student will be able to design algorithms.
ii. Given an algorithm, he/she will be able to analyse it and produce an estimate of its time and space requirements.

References

1. A. Levitin, "Introduction to the Design & Analysis of Algorithms", Pearson Education, 3rd Edition (2008).
2. Ellis Horowitz, Sartaj Sahni, Sanguthevar Rajasekaran, "Fundamentals of Computer Algorithms", Orient Longman, Universities Press, 2nd Edition (2008)
3. Harsh Bhasin, "Algorithms Design and Analysis", Oxford University Press, 1st Edition (2015).
4. Rajesh K.Shukla, "Analysis and Design of Algorithms, A Beginner's Approach", Wiley (2015)
5. Richard Neapolitan , Kumarss Naimipour, "Foundations Of Algorithms ",Jones and Bartlett Publishers, Inc, 4th Edition (2011).
6. Sara Baase , Allen Van Gelder , "Computer Algorithms: Introduction to Design and Analysis", Pearson India, 3rd Edition (2002).
7. Thomas H. Cormen, et al., "Introduction to Algorithms", Prentice Hall, 3rd Edition (2010)

Course Plan

Module	Contents	Hours	Sem. Exam Marks
I	Introduction to Algorithm Analysis : Algorithm and its properties - Apriory and Aposterior analysis of algorithms - Time and Space Complexity- Elementary Operation and Complexity Estimation of Simple Algorithms - Asymptotic notations and their properties - Common Complexity functions - Recurrence Relations - Solution of Recurrence Relations - Iteration Method - Recurrence Tree Method - Master's Theorem (Proof not required)	10	15%
II	Divide and Conquer Method : Control Abstraction for Divide and Conquer- 2- way Merge Sort , Quick sort, Binary Search, Finding Maximum and minimum, Divide and Conquer Matrix Multiplication.	9	15%
FIRST INTERNAL EXAMINATION			
III	Greedy Strategy: - Control Abstraction for Greedy Strategy - The Fractional Knapsack Problem - Prims' and Kruskal's Algorithms for Minimal Spanning Tree - Job Sequencing Problem.	8	15%
IV	Dynamic Programming : Control Abstraction for Dynamic Programming - The Principle of Optimal Substructure - All Pair	8	15%

PRINCIPAL
Nehru College of
Engineering and Research Centre
Pampady, Thiruvilwamala, Thrissur
Pin 680 597 Kerala

	Shortest Path Problem - Travelling Sales Person Problem, Divide and Conquer vs Dynamic Programming.		
V	Algorithm Design by State Space Trees: State Space - Bounding Functions – Examples. Backtracking: Control Abstraction for Backtracking - The N-Queen's Problem, Sum of Subset Problem. Branch and Bound: Depth First, Breadth First and Best First Branch and Bound strategies and their control abstractions - The N^2-1 Puzzle Problem	10	25%
SECOND INTERNAL EXAMINATION			
VI	Introduction to Computational Complexity: Tractable and Intractable Problems - Complexity Classes- P and NP Classes - SAT and 3-SAT Problems - NP-Hard and NP-Complete Classes – Study of NP complete problems - Travelling Sales Person Problem - Knapsack Problem - Clique Problem, Vertex Cover Problem. ***Note: Only general concepts required to be covered. No proof required. Only elementary treatment is required.***	10	15%
END SEMESTER EXAM			
QUESTION PAPER PATTERN			

There will be two parts in the Question paper - **Part A and Part B**

Part A will have 8 short answer questions of 3 marks each (8 X 3 M = 24 M). There will be no choice questions.

Part B will have 6 essay questions one from each module of 6 marks each, with an alternative choice question from the same module (6 x 6M=36M). The maximum number of sub part questions in **Part B** to be limited to 2.

The total marks assigned to questions in Part A (Short answer) and Part B (Essay) together from a single module will not exceed the marks assigned to that module specified in the course plan.

PRINCIPAL
Nehru College of
Engineering and Research Centre
Pampady, Thiruvilwamala, Thrissur Dt
Pin 680 597 Kerala

Course code	Course Name	L-T-P - Credits	Year of Introduction
RLMCA204	Big Data Technologies	3-1-0-4	2016

Course Objectives

- To understand the concept of Big data
- To understand HADOOP
- To understand the Big Data concerns: Storage and Analysis

Syllabus

Introduction to Big Data Platform, Big Data Storage Concepts, Big Data Processing Concepts, Introduction to Hadoop Ecosystem, Understanding Map Reduce Fundamentals, Big Data Storage Technology, Big Data Analysis Techniques

Expected Outcome

The students will

i. Be able to work with big data platform.
ii. Understand Hadoop and develop its applications on Big Data.

References

1. Chandrakant Naikodi, "Managing Big Data", Vikas Publishing, 2015
2. DreamTech Editorial Services, "Big Data", Dreamtech Press, 2015 Edition.
3. Michael Frampton, "Big Data Made Easy: A Working Guide to the Complete Hadoop Toolset", Apress, 2014
4. Michael Manoochehri, "Data Just Right", Pearson education, 2015.
5. Thomas Erl ,"Big Data Fundamentals Concepts, Drivers and Techniques", Pearson Education First Edition,2016
6. Vijay Srinivas Agneeswaran, "Big Data Analytics beyond HADOOP", Pearson Education(2015)

Course Plan

Module	Contents	Hours	Sem. Exam Marks
I	Introduction to Big Data Platform – History of Data Management- Structuring Big data - Elements of Big Data, Big data stack - Big data Analytics - Introducing Technologies for handling Big Data: Distributed and Parallel Computing for Big Data - Cloud Computing and Big Data	8	15%
II	Big Data Storage Concepts- Clusters - File Systems and Distributed File Systems- NoSQL – Sharding – Replication – Sharding and Replication – CAP Theorem – ACID – BASE Big Data Processing Concepts- Parallel Data Processing – Distributed Data Processing – Hadoop – Processing in Batch Mode – Processing in Real time Mode	8	20%
FIRST INTERNAL EXAMINATION			
III	Introduction to Hadoop Ecosystem - Hadoop Distributed File System-HDFS Architecture - Features of HDFS - Map Reduce- Features of Map Reduce- Hadoop Yarn - HBase- Hive – Sqoop – ZooKeeper – Flume – Oozie. ***Note : Lab Assignments and hands on training to be given in labs.***	10	15%
IV	Understanding Map Reduce Fundamentals- Map Reduce Framework- Exploring Features of Map Reduce- Working of Map Reduce- Exploring Map and Reduce Functions- Techniques	9	15%

PRINCIPAL
Nehru College of
Engineering and Research Centre
Pampady Thiruvilwamala, Thrissur Dt
Pin 680 597 Kerala

	to optimize Map Reduce- Hardware/ Network Topology- Synchronization- File System- Uses of Map Reduce ***Note: provide practical assignments on familiarizing HADOOP environment.***		
V	Big Data Storage Technology – On-Disk Storage Devices – Distributed File Systems, RDBMS Databases, NoSQL Databases, NewSQL Databases – In-Memory Storage Devices: In-Memory Data Grids, In-Memory Databases.	9	20%
SECOND INTERNAL EXAMINATION			
VI	Introduction to Big Data Analysis Techniques- Quantitative Analysis – Qualitative Analysis – Data Mining - Statistical Analysis - Machine Learning – Semantic Analysis – Visual Analysis	9	15%
END SEMESTER EXAM			
QUESTION PAPER PATTERN			

There will be two parts in the Question paper - **Part A and Part B.**

Part A will have 8 short answer questions of 3 marks each (8 X 3 M = 24 M). There will be no choice questions.

Part B will have 6 essay questions one from each module of 6 marks each, with an alternative choice question from the same module (6 x 6M=36M). The maximum number of sub part questions in **Part B** to be limited to 2.

The total marks assigned to questions in Part A (Short answer) and Part B (Essay) together from a single module will not exceed the marks assigned to that module specified in the course plan.

NEHRU COLLEGE OF ENGINEERING & RESEARCH CENTRE THRISSUR

NEHRU COLLEGE OF ENGINEERING AND RESEARCH CENTRE M.C.A. PAMPADY

PRINCIPAL
Nehru College of
Engineering and Research Centre
Pampady, Thiruvilwamala, Thrissur Dt
Pin 680 597 Kerala

Course code	Course Name	L-T-P - Credits	Year of Introduction
RLMCA208	Introduction to Machine Learning	3-1-0-4	2016

Course Objectives

- To introduce the basic concepts and techniques of Machine Learning.
- To develop skills for using machine learning algorithms for solving practical problems.
- To develop skills for using standard machine learning libraries.

  Note: The course should be taught from a programmer's perspective. Mathematical rigor is not expected.

Syllabus

Introduction to Machine Learning - Lazy Learning - Probabilistic Learning - Classification Using Decision Trees and Rules-Regression Methods - Understanding regression - Neural Networks - Unsupervised Learning - Support Vector Machines.

Expected Outcome

The students will be able

- To recognize machine learning problems and apply suitable algorithms.
- To use machine learning libraries on various platforms

References

1. Brett Lantz, "Machine Learning with R", Packt Publishing, 2nd Edition.
2. Tom Micheal, "Machine Learning", Mcgraw Hill (1997)
3. Vinod Chandra S S, Anand Hareendran S., "Artificial Intelligence and Machine Learning", Prentice Hall (2014)
4. Simon Rogers, Mark Girolami, "A First course in Machine Learning", CRC Press, First Indian reprint, 2015.
5. N P Padhy, "Artificial Intelligence and Intelligent Systems", Oxford University Press, 1st Edition.
6. E. Alpayidin, "Introduction to Machine Learning", Prentice Hall of India (2005)
7. T. Hastie, RT Ibrashiran and J. Friedman, "The Elements of Statistical Learning", Springer 2001
8. Toby Segaran, "Programming Collective Intelligence: Building Smart Web 2.0 Applications", O'Reilly Media; 1 edition (16 August 2007).
9. Drew Conway, John Myles White, "Machine Learning for Hackers: Case Studies and Algorithms to Get You Started", O'Reilly Media; 1 edition (13 February 2012)
10. Christopher Bishop, "Pattern Recognition and Machine Learning (Information Science and Statistics)", Springer 2011 edition (15 February 2010)
11. Machine Learning - Course Materials @ http://cs229.stanford.edu/materials.html

Suggested MOOC

1. https://www.coursera.org/learn/machine-learning

Course Plan

Module	Contents	Hours	Sem. Exam Marks
I	Introduction to Machine Learning - How do machines learn - Selecting the right features, Understanding data:- numeric variables – mean, median, mode, Measuring spread. Review of distributions: Uniform and normal. Categorical variables. Dimensionality Reduction - Principal Component Analysis	8	10%
II	Lazy Learning - Classification Using k-Nearest Neighbor algorithm. Measuring similarity. Choice of k.	10	10%

NEHRU COLLEGE OF ENGINEERING & RESEARCH CENTRE PAMPADY THIRUVILWAMALA THRISSUR
PRINCIPAL Nehru College of Engineering and Research Centre Pampady Thiruvilwamala Thrissur
M.C.A
A P J Abdul Kalam Technological University

	Probabilistic Learning - Naive Bays' classifier. Review of probability - Joint probability, Conditional probability and Bay's theorem, Naive Bayes algorithm.		
FIRST INTERNAL EXAMINATION			
III	Classification Using Decision Trees and Rules - Divide and conquer strategy. Decision tree algorithm. Regression Methods - Simple linear regression - Ordinary least squares estimation Correlations - Multiple linear regression	8	20%
IV	Neural Networks: Biological motivation - Perceptron - Activation functions - Network Models - Cost Function - Back-propagation algorithm. Introduction to deep learning.	10	20%
V	Support Vector Machines - Review of finite dimensional vector spaces - Hyper planes - Support Vector Classifier. Kernel methods - Gaussian kernel, Multi class SVM.	10	20%
SECOND INTERNAL EXAMINATION			
VI	Evaluating Model Performance: Precision and recall, Confusion matrix, Cross validation Bootstrap sampling, Improving model performance with ensemble learning, Bagging and Boosting. Introduction to random forest. ***Assignments*** ***The assignments for this course can be given in R, Python or any other suitable platform. At least two programming assignments should be given. Each of them should explore the practical aspects of implementing a machine learning system in the chosen platform.***	10	20%
END SEMESTER EXAM			
QUESTION PAPER PATTERN			

There will be two parts in the Question paper - **Part A and Part B.**

Part A will have 8 short answer questions of 3 marks each (8 X 3 M = 24 M). There will be no choice questions.

Part B will have 6 essay questions one from each module of 6 marks each, with an alternative choice question from the same module (6 x 6M=36M). The maximum number of sub part questions in **Part B** to be limited to 2.

The total marks assigned to questions in Part A (Short answer) and Part B (Essay) together from a single module will not exceed the marks assigned to that module specified in the course plan.

NEHRU COLLEGE OF ENGINEERING & RESEARCH CENTRE PARIPADY THIRUVILWAMALA, THRISSUR DT.

PRINCIPAL
Nehru College of
Engineering and Research Centre
Paripady, Thiruvilwamala, Thrissur Dt
Pin 680 597 Kerala

M.C.A.